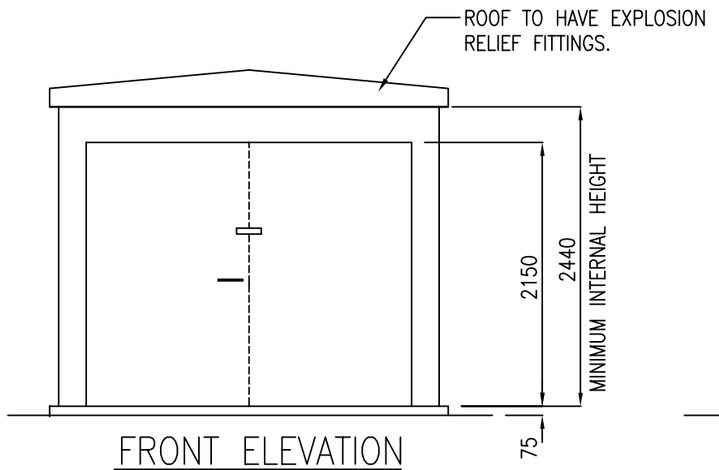

FRONT ELEVATION
(SCALE 1:50)

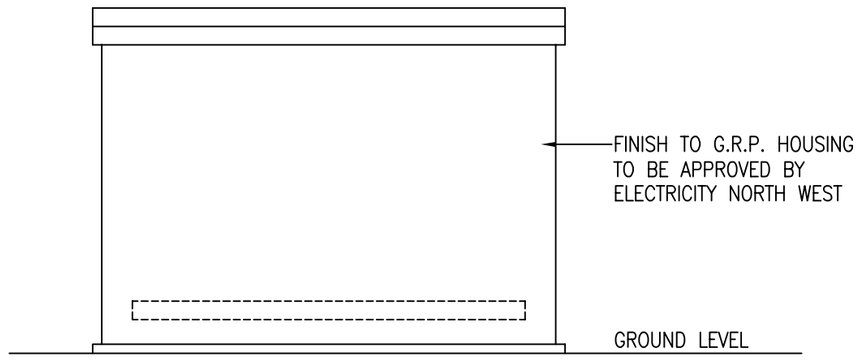

SIDE ELEVATION
(SCALE 1:50)

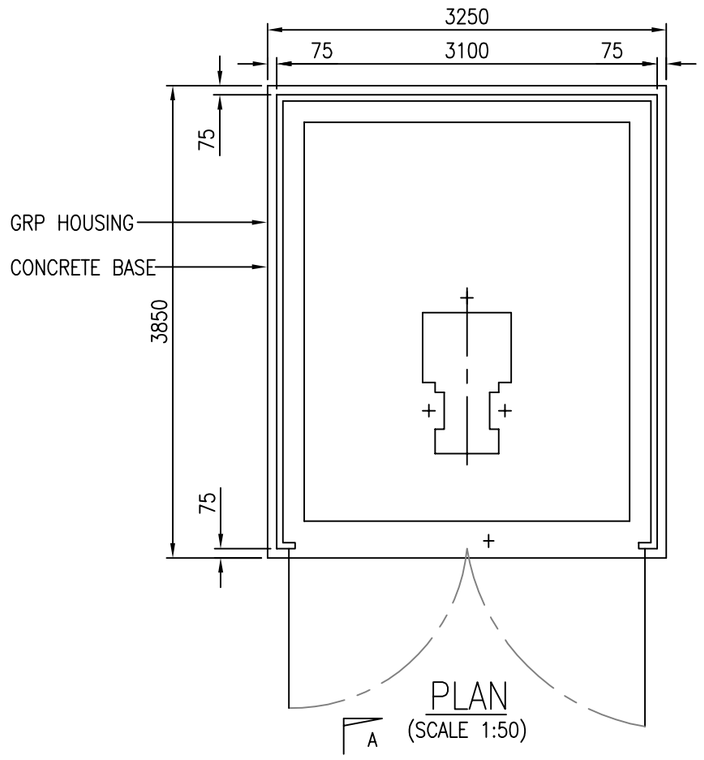

PLAN
(SCALE 1:50)

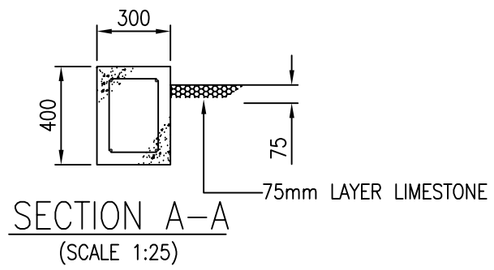

SECTION A–A
(SCALE 1:25)

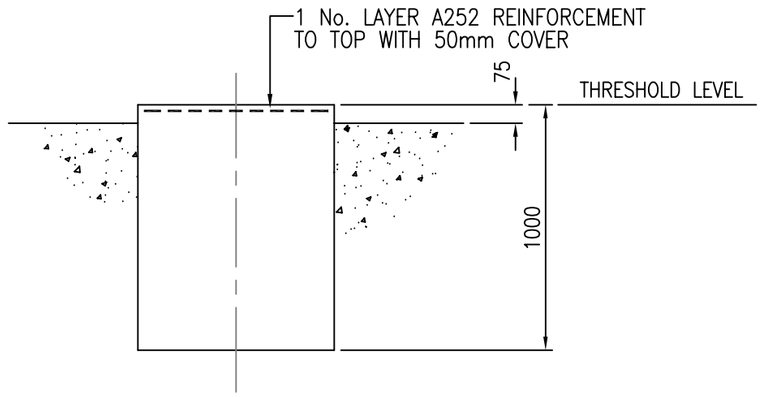

SECTION B–B
(SCALE 1:25)

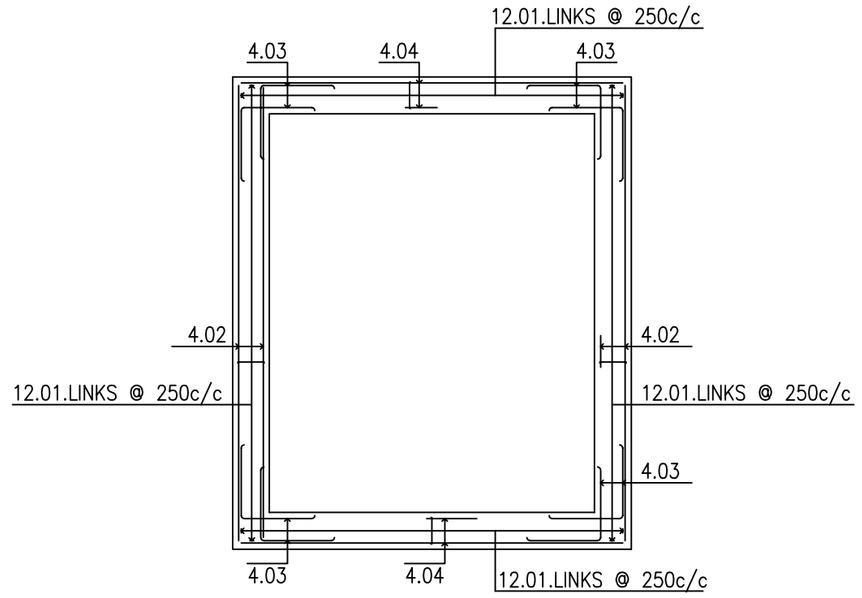

PLAN ON CONCRETE FOUNDATION
(SCALE 1:50)

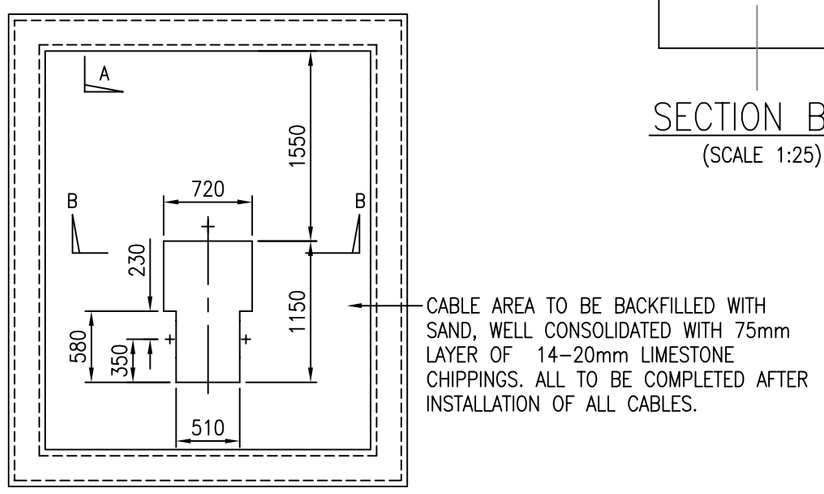

FOUNDATION PLAN
(SCALE 1:50)

BENDING SCHEDULE							
BAR NAME	BAR MK	TYPE & SIZE	LENGTH OF BAR	A	B	SHAPE CODE	TOTAL No
LINK	01	T6	1200	300	200	60	48
STRAIGHT	02	T10	3675			20	8
CORNER	03	T10	1200	600		37	16
STRAIGHT	04	T10	3125			20	8

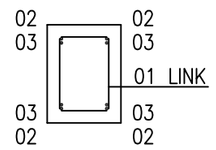

TYPICAL SECTION THROUGH CONCRETE FOUNDATION
(SCALE 1:25)

NOTES:

CONCRETE FOR PLINTH AND RING BEAM TO BE 1:2:4 MIX OF ORDINARY PORTLAND CEMENT
CONCRETE 35N/mm² (28 DAY STRENGTH).
20mm AGGREGATE SHALL BE PLACED & COMPACTED WITHIN ADEQUATE FORMWORK TO ENSURE THAT THE TOP SURFACES ARE TRUE TO PLANE WITH FLOOR TO HAVE STEEL FLOAT FINISH TO CLOSE TOLERANCE OF +/–3mm IN 3m.
NO DRILLING TO TAKE PLACE WITHIN 28 DAYS OF CASTING.
NO PERCUSSION DRILLS TO BE USED ONLY ROTARY DRILLS.
DO NOT OVER–TIGHTEN BOLTS.
TYPICAL MAX WEIGHT OF PLANT = 1500Kg.
PLINTH SHALL HAVE TYPICAL MIN DEPTH OF 1000mm. HOWEVER, THE PLINTH MUST BE SUITABLE WITH RESPECT TO GROUND CONDITIONS AND LOADING. THE LEVEL OF THE RING BEAM TO BE AGREED ON SITE WITH THE ENGINEER IN CHARGE PRIOR TO CONSTRUCTING SHUTTERING.

COMPOUND TO BE BACK–FILLED AFTER INSTALLATION OF CABLES WITH SAND AND 75mm TOP LAYER OF 14–20mm LIMESTONE CHIPPINGS.

GRP HOUSING TO BE FROM ELECTRICITY NORTH WEST APPROVED SUPPLIER. DOORS TO HAVE HASP & STAPLE TO ACCEPT ELECTRICITY NORTH WEST PADLOCKS. LEFT HAND DOOR TO BE FIRST OPENING LEAF

FOUNDATIONS TO BE TAKEN DOWN TO GROUND THAT IS SUFFICIENTLY FIRM TO PROVIDE PHYSICAL SUPPORT TO THE STRUCTURE. SITE PHOTO'S TO BE TAKEN INDICATING EVIDENCE OF FOUNDATION DEPTH WHERE INCREASED DIG IS GREATER THAN 400MM. THESE WILL BE PROVIDED FOR PAYMENT AND AUDIT PURPOSES.

THIS DRAWING SHOULD BE READ IN CONJUNCTION WITH ELECTRICITY NORTH WEST ELECTRICAL SPECIFICATION REF. 400 D 5 AND ALL ASSOCIATED WORKS MUST COMPLY WITH THIS INFORMATION AND DETAIL IN FULL.

THIS DRAWING SHOULD BE READ IN CONJUNCTION WITH ELECTRICITY NORTH WEST ES 301 & ES 352 AND ALL ASSOCIATED WORKS MUST COMPLY WITH THIS INFORMATION AND DETAIL IN FULL

GENERAL SPECIFICATION FOR GRP HOUSING ENCLOSURE

1. SUPPLIED/PURCHASED FROM NOMINATED SUPPLIER, UNDER FRAMEWORK AGREEMENT.
2. DETAILS INCLUDING DOOR LOCKING SPECIFICATION ALL AS IN ES 301.
3. LOWER LEVEL VENTILATION MUST BE APPROVED BY ELECTRICITY NORTH WEST LIMITED & EQUIVALENT TO TOTAL AIR FLOW OF 0.75Metres² (FOR DETAILED SPECIFICATION SEE ENGINEERING SPECIFICATION 301)

electricity north west

FREDERICK ROAD, SALFORD
M6 6QH
TEL 0161 6041370

CIVIL DISTRIBUTION SUBSTATION

CONSTRUCTION DETAILS FOR STANDARD GRP SUBSTATION

DRAWN	ASR	SCALE	1:25	SITE NAME	–		
APPROVED	WD	DATE	NOVEMBER 18	P.F.R. NO.	–	DWG STATUS	APPROVAL
OLD DWG NO	–	SHEET SIZE	A2	DWG NO	900350–030	REV	0