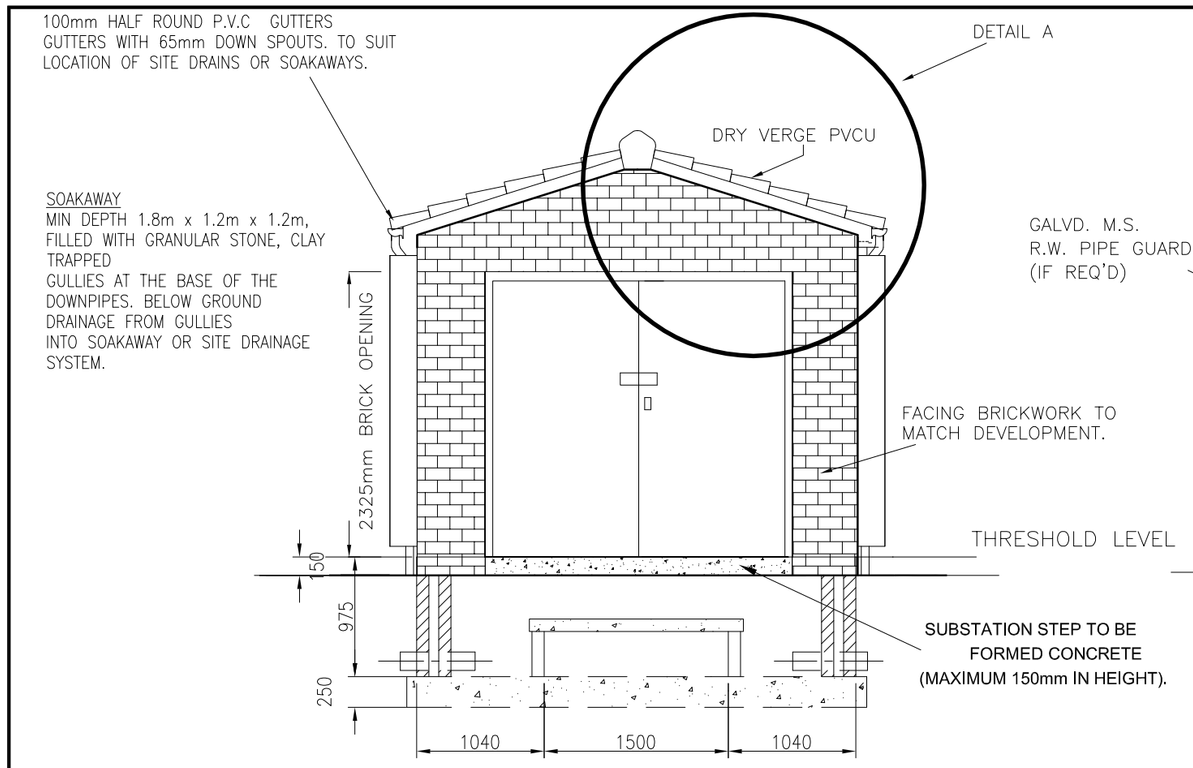

FRONT ELEVATION

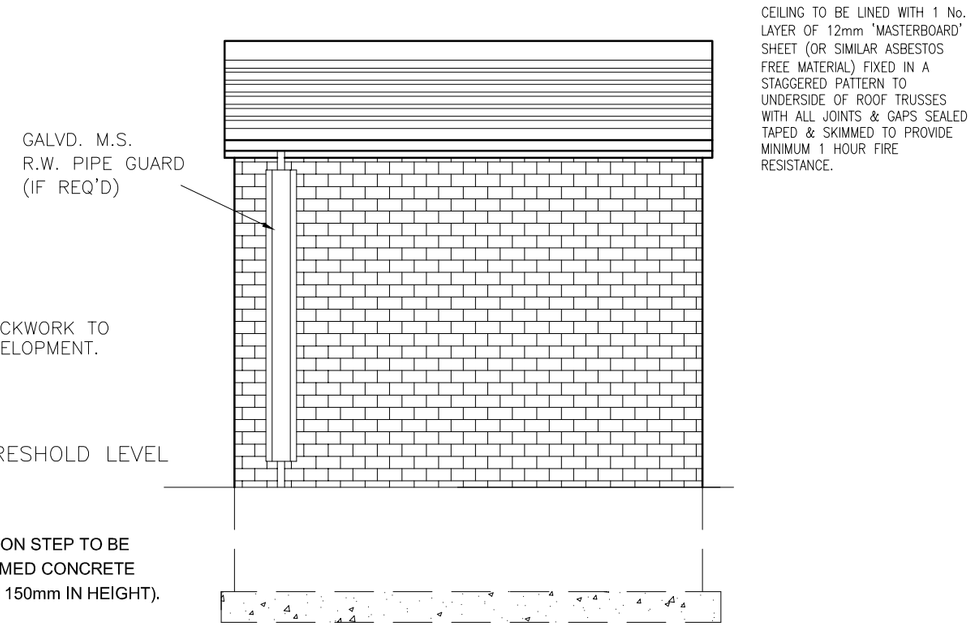

SIDE ELEVATION

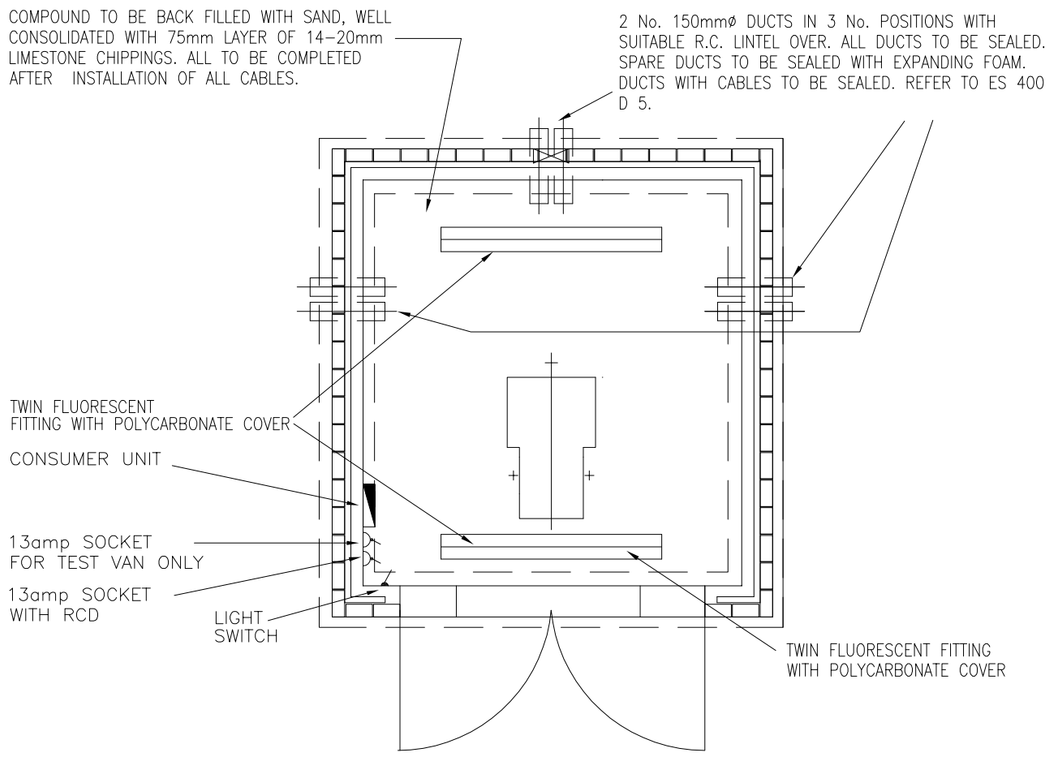

ELECTRICAL LAYOUT

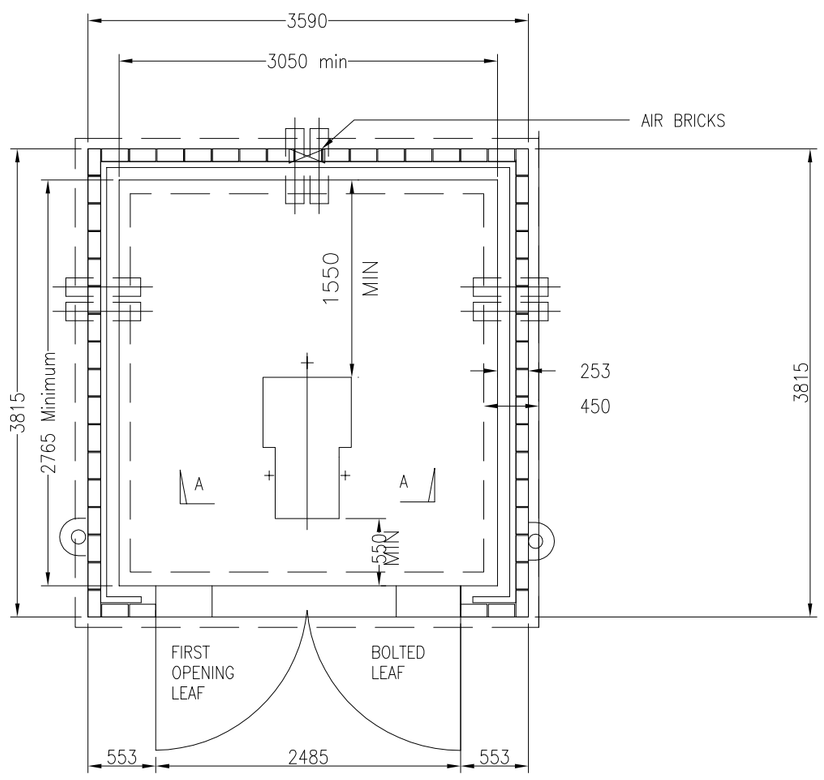

FLOOR PLAN

GENERAL NOTES:

1. THIS DRAWING ILLUSTRATES A TYPICAL BRICK ENCLOSURE FOR EXTERNAL SWITCHGEAR. THE ACTUAL SIZE OF THE BUILDING WILL DEPEND ON THE EXTERNAL SWITCHGEAR TO BE ENCLOSED AND SHOULD BE READ IN ACCORDANCE WITH THE REQUIREMENTS IN ELECTRICITY NORTH WEST CODES OF PRACTICE CP326 & CP352
2. ALL DIMENSIONS ARE IN MILLIMETRES UNLESS NOTED OTHERWISE.
3. ALL LEVELS ARE IN METRES AND RELATE TO AN ARBITRARY DATUM LEVEL OF +0.000m, BEING DPC LEVEL FOR THE BUILDING
4. THE CONTRACTOR IS RESPONSIBLE FOR THE ACCURACY OF SETTING OUT ON SITE AND THE FABRICATION OF MATERIALS PRIOR TO CONSTRUCTION.
5. ALL DIMENSIONS TO BE SITE CHECKED.
6. ALL WORK TO CARRIED OUT IN ACCORDANCE WITH CURRENT BUILDING REGULATIONS AND RELEVANT BRITISH STANDARDS AND CODES OF PRACTICE.
7. THE CONTRACTOR IS TO ESTABLISH THE LOCATION OF ALL EXISTING SERVICES AND INFORM THE SENIOR AUTHORISED PERSON PRIOR TO COMMENCING ON SITE.

SPECIFICATION:

GENERAL:

8. DO NOT SCALE. ALL DIMENSIONS ON THIS DRAWING ARE IN MILLIMETRES AND ARE TYPICAL SIZES FOR REFERENCE ONLY. FINAL DIMENSIONS ARE TO BE VERIFIED WITH ELECTRICITY NORTH WEST BEFORE PROCEEDING
9. THIS DRAWING IS TO BE READ IN CONJUNCTION WITH ELECTRICITY NORTH WEST CODE OF PRACTICE ES352
10. ALL WORK IS TO BE CARRIED OUT IN ACCORDANCE WITH CURRENT BUILDING REGULATIONS, RELEVANT BRITISH STANDARDS AND CODES OF PRACTICE.

SITE:

11. CONTRACTOR TO OBTAIN UNDERGROUND CABLE & SERVICE RECORDS PRIOR TO COMMENCEMENT OF ANY WORKS.
12. THE CONTRACTOR MUST ASSUME THAT ANY EXISTING CABLES LOCATED WITHIN THE WORKS ARE LIVE AND LIAISE WITH THE ELECTRICITY NORTH WEST ENGINEER FOR ADVICE.
13. SITE SPECIFIC RISK ASSESSMENT TO BE UNDERTAKEN PRIOR TO COMMENCEMENT OF ANY WORKS.
14. FOUNDATION DESIGN ON THIS DRAWING ASSUMES FORMATION FROM A SUITABLE BEARING LEVEL THAT IS SUFFICIENTLY FIRM TO PROVIDE PHYSICAL SUPPORT FOR THE STRUCTURE.
15. FOUNDATION FORMATION LEVELS TO BE INSPECTED AND APPROVED PRIOR TO FOUNDATION CONSTRUCTION.

MATERIALS:

FOUNDATIONS

1. 600mm WIDE x 200mm DEEP STRIP FOOTINGS FORMED IN MASS CONCRETE

WALLS

2. FOUNDATION TO GROUND LEVEL: TRENCH BLOCK OR 2No LEAVES OF ENGINEERING QUALITY BRICKWORK WITH 50mm CAVITY FILLED WITH WEAK MIX CONCRETE.
3. GROUND TO DAMP PROOF COURSE (DPC) LEVEL: 102.5mm ENGINEERING BRICK (IBSTOCK STAFFORDSHIRE SMOOTH SLATE BLUE) OUTER LEAF, 50mm CAVITY AND 100mm 7N/mm² BLOCKWORK INNER LEAF
4. HORIZONTAL DPC IN PITCH POLYMER, OR SIMILAR, ALL AROUND
5. ABOVE DPC LEVEL: 102.5mm FACING BRICKWORK (IBSTOCK CHESTER RED BLEND) OUTER LEAF, 50mm CAVITY AND 100mm 7N/mm² BLOCKWORK INNER LEAF. SOLDIER BRICK OUTER LEAF ABOVE DOOR IN IBSTOCK STAFFORDSHIRE SMOOTH SLATE BLUE ENGINEERING BRICK
6. CAVITY WALL TIES: HALFEN HTS C12 x 200mm STAINLESS STEEL CAVITY TIES AT MAX 750mm HORIZONTAL CTRS, 450mm VERTICAL CTRS & 225mm VERTICAL CTRS WHERE WITHIN 300mm OF THE OPENING.
7. LINTEL OVER DOOR: HARVEY A/MC80EB/F IN STAINLESS STEEL, OR SIMILAR APPROVED, WITH MIN 150mm END BEARINGS.
8. MORTAR: CEMENT:LIME:SAND 1:1:6 MIX COLOUR NATURAL WITH BUCKET HANDLE POINTING.
9. CAVITY CLOSERS: BLOCKWORK RETURNED AGAINST THE BRICKWORK INCLUDING A VERTICAL DPC

ROOF

10. MARLEY MODERN SMOOTH GREY INTERLOCKING CONCRETE ROOF TILES WITH MINIMUM 100mm HEADLAP ON
11. 25x38 TREATED SW TO SUIT TILE SPACING ON
12. RUBBEROID IKO 1F' (BITUMINOUS) SARKING MEMBRANE TO BS EN 13707, BS 8747:2007 OR SIMILAR, ON
13. PROPRIETARY GANGNAIL ROOF TRUSSES (OR LOOSE RAFTERS) AT MAX 600mm CENTRES AND 17.5° PITCH, ON
14. 100x75mm PRESERVATIVE TREATED SW WALLPLATE FIXED DOWN TO TO TOP CAVITY WALL INNER LEAF USING 30x5mm MS STPAPS AT MAX 1800mm CENTRES FIXED DOWN BLOCKWORK WALL
15. WHITE PVCu EAVES FASCIAS AND VENTILATED SOFFITS
16. DRY FIX RIDGE AND VERGES

DRAINAGE

17. 115mm BLACK PLASTIC DEEPFLOW GUTTERS
18. 68mm I.D. BLACK PLASTIC DOWNPIPES
19. PLASTIC RAINWATER GULLIES WITH RODDING POINTS
20. DRAINAGE TO DISCHARGE INTO EXISTING MAIN SURFACE WATER DRAIN OR INTO A SOAKAWAY LOCATED A MINIMUM 5.0m FROM ANY STRUCTURE

EXTERNAL SECURITY DOORS

21. DOOR & IRONMONGERY TO ELECTRICITY NORTH WEST STANDARD SPECIFICATION

THIS DRAWING SHOULD BE READ IN CONJUNCTION WITH ELECTRICITY NORTH WEST ES 326 & ES 352 AND ALL ASSOCIATED WORKS MUST COMPLY WITH THIS INFORMATION AND DETAIL IN FULL

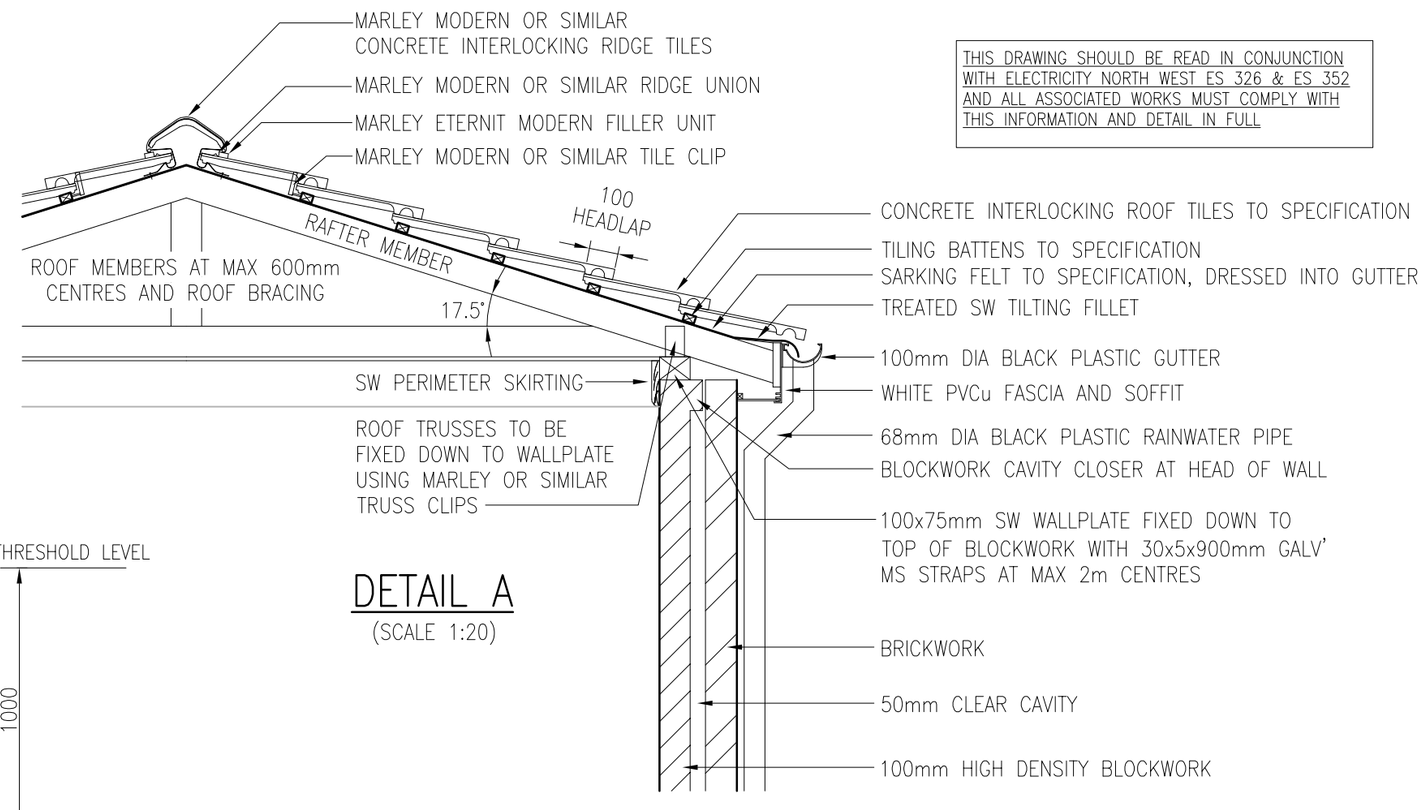

DETAIL A
(SCALE 1:20)

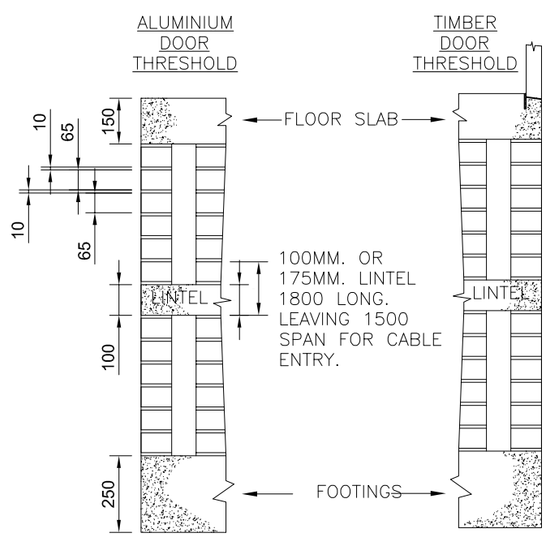

SECTION THRESHOLD DETAIL

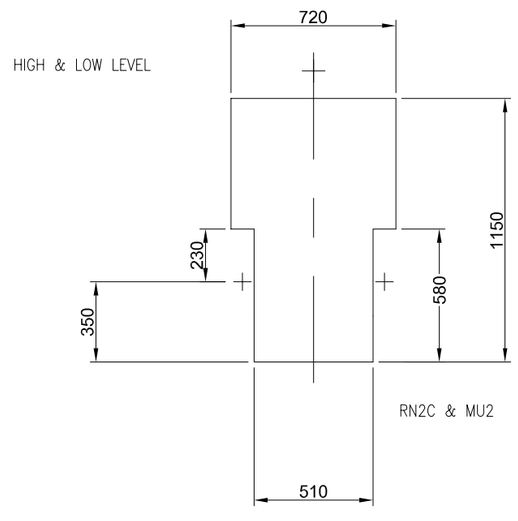

SWITCHGEAR BASE DETAILS

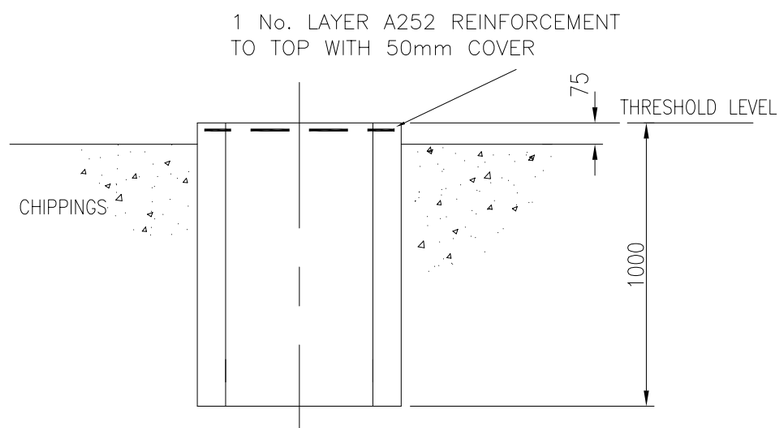

SECTION A–A

electricity north west	FREDERICK ROAD, SALFORD M6 6QH TEL 0161 6041370			CIVIL DISTRIBUTION SUBSTATION CONSTRUCTION DETAILS FOR STANDARD INDOOR BRICK SUBSTATION			
DRAWN	ASR	SCALE	1:25	SITE NAME	–		
APPROVED	WD	DATE	NOVEMBER 18	P.F.R. NO.	–	DWG STATUS	APPROVAL
OLD DWG NO	–	SHEET SIZE	A2	DWG NO	900350–029	REV	0