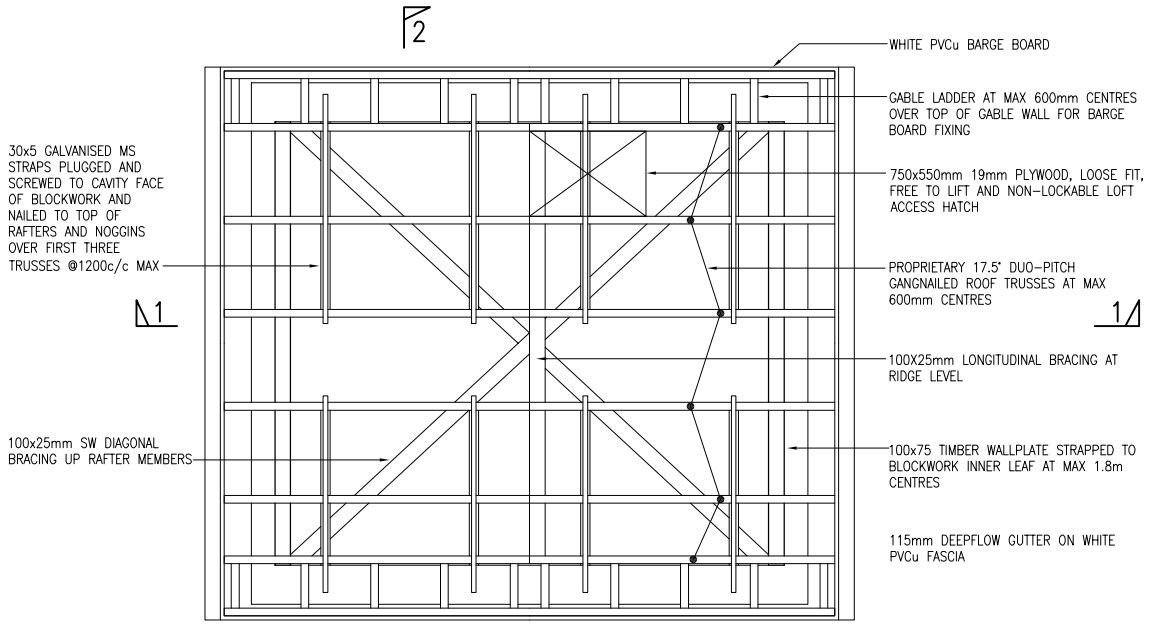

PLAN ON ROOF CARCASSING

(SCALE 1:25)

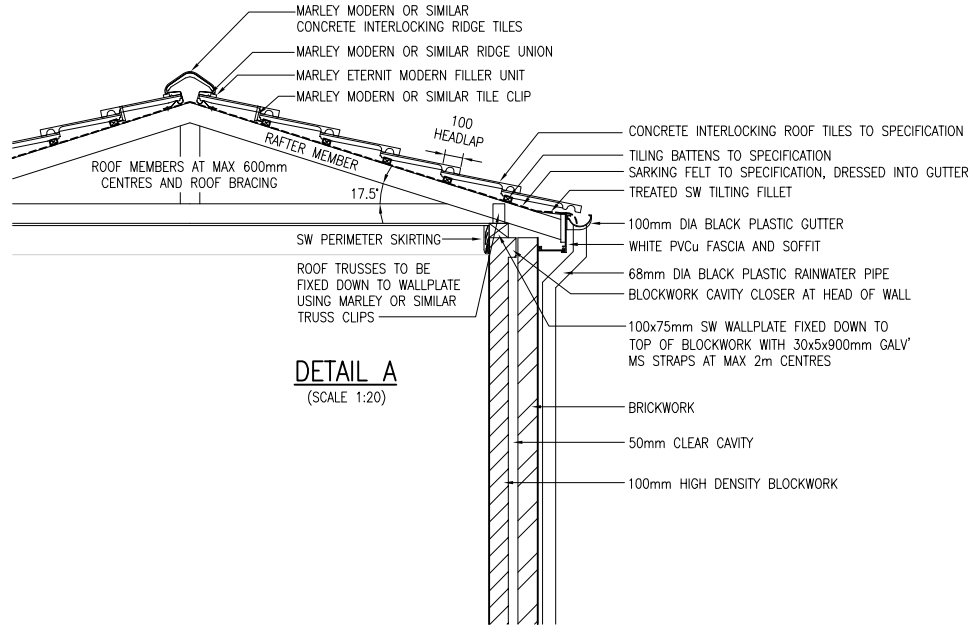

DETAIL A

(SCALE 1:20)

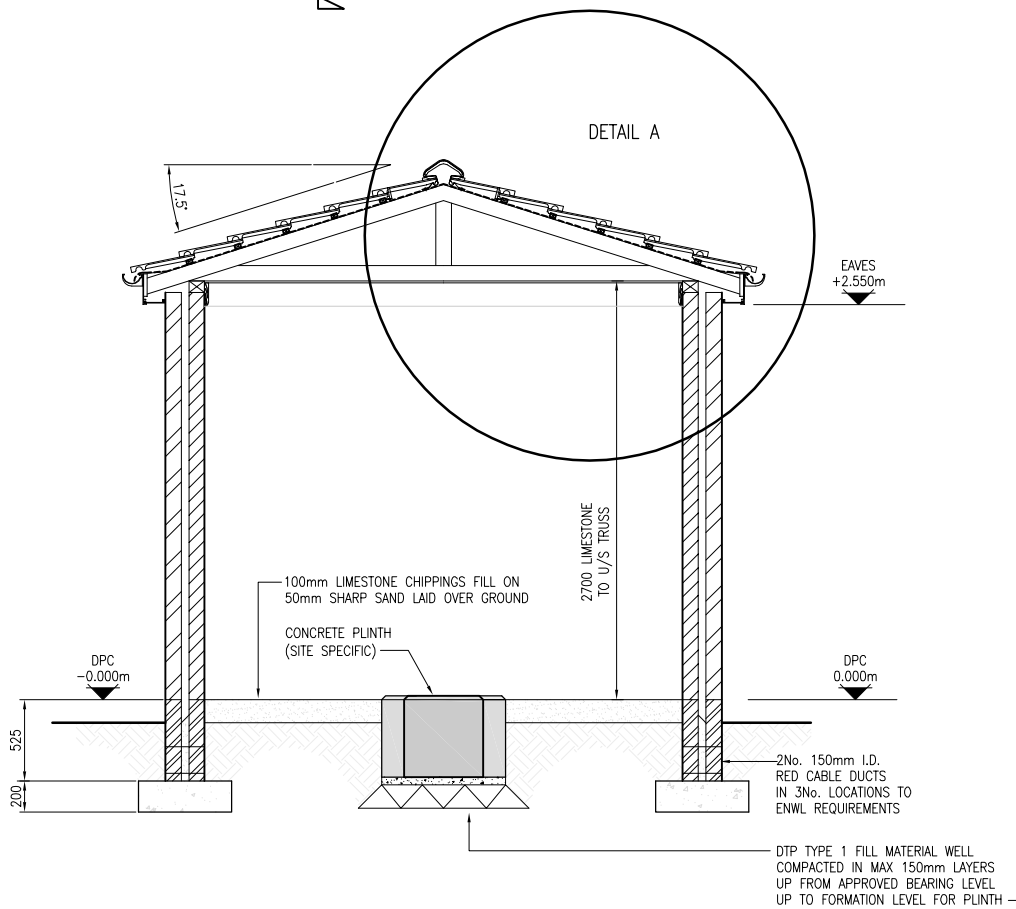

SECTION 1–1

(SCALE 1:25)

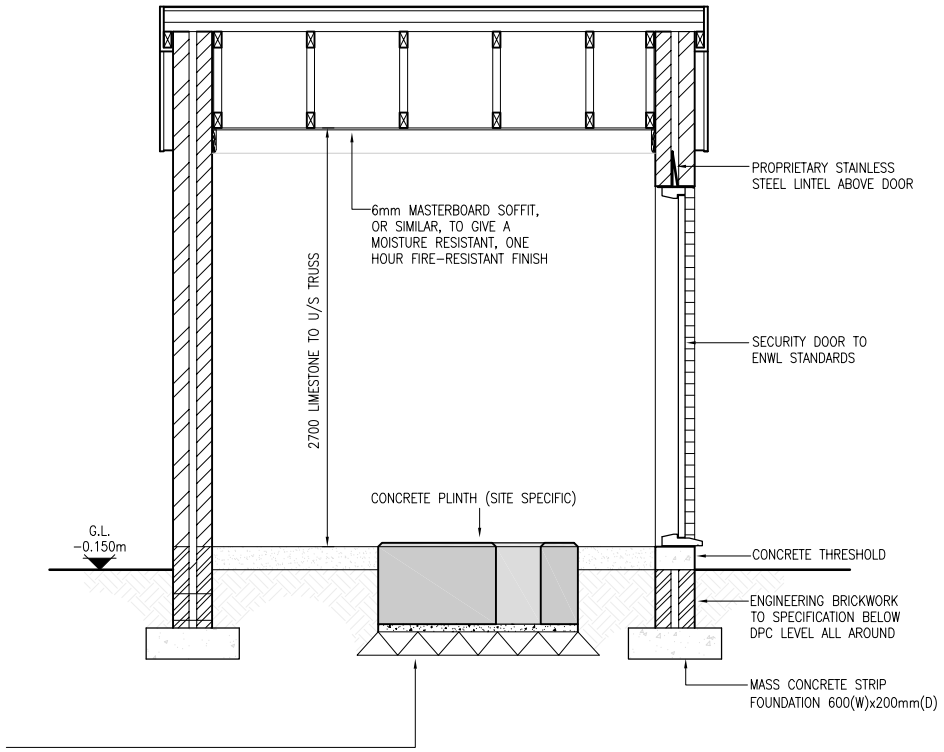

SECTION 2–2

(SCALE 1:25)

THIS DRAWING TO BE READ IN CONJUNCTION WITH DRAWING No. 900350/026

electricity north west

FREDERICK ROAD, SALFORD
M6 6QH
TEL 0161 6041370

POLICY & STANDARDS

TYPICAL BRICK HOUSING for EXTERNAL SUBSTATION sheet 2 of 2

DRAWN	ASR	SCALE	AS SHOWN @A1	SITE NAME	–		
APPROVED	JAB	DATE	NOV 17	P.F.R. NO.	–	DWG STATUS	APPROVAL
OLD DWG NO	–	SHEET SIZE	A1	DWG NO	900350-027	REV	0