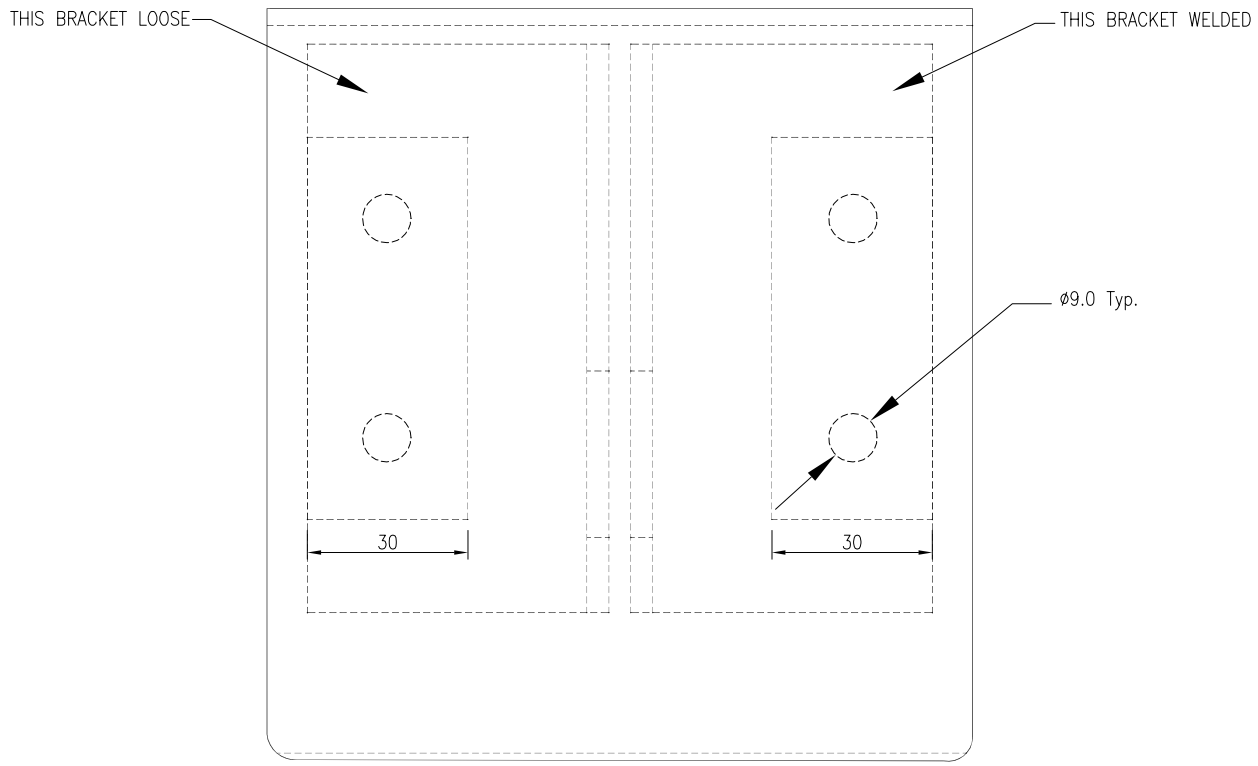

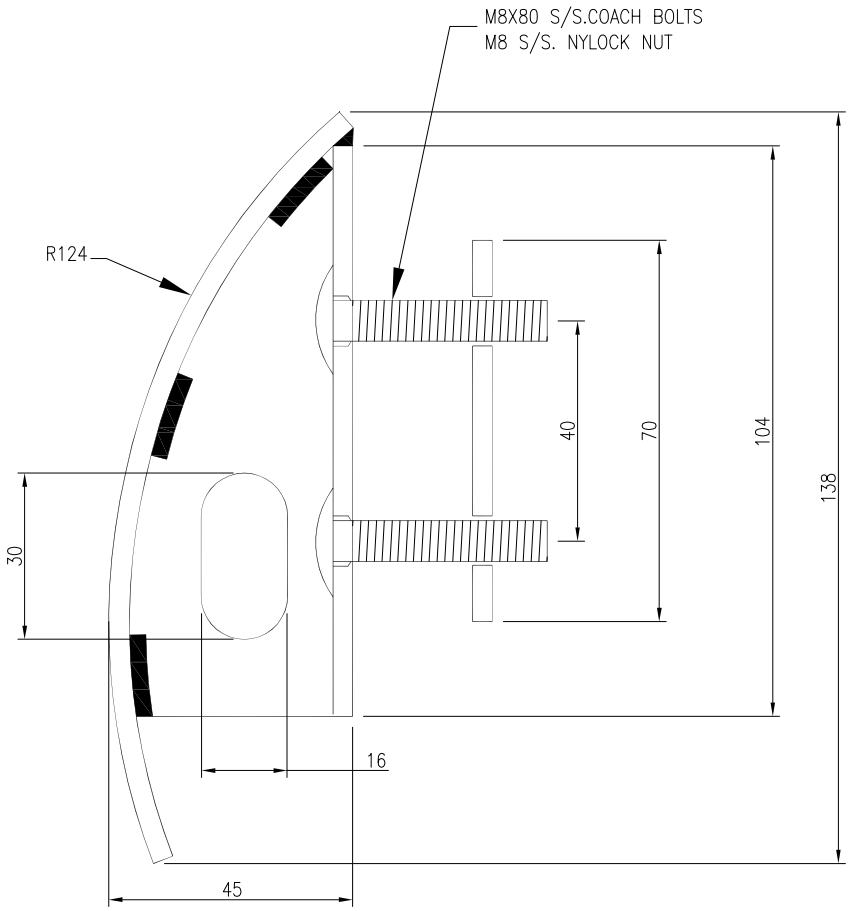

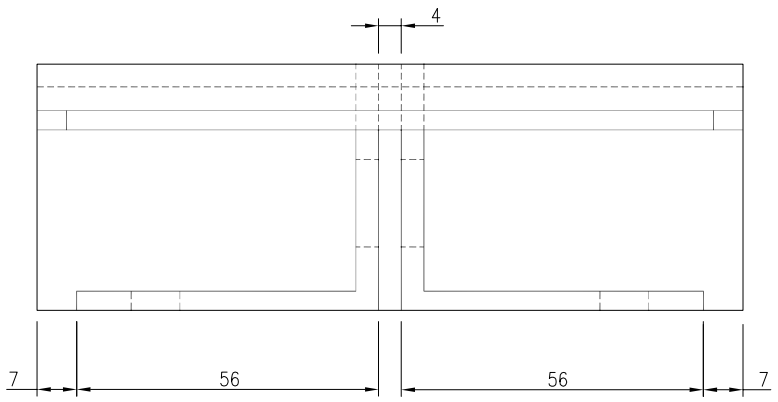

RIGHT HAND ACTIVE DOOR SHOWN

GENERAL NOTES

DO NOT SCALE THIS DRAWING, TAKE FIGURED DIMENSIONS ONLY

DETAIL SPECIFICATION

MATERIALS 316 STAINLESS STEEL TIG WELDED COVER PLATE 4MM FLAT BAR FORMED TO SHAPE.

LOCKING PLATES CONSTRUCTED FROM 4MM STAINLESS LOCKING PLATES. STAINLESS STEEL PACKER PLATES 10MM THICK WITH HOLES AS STATED.

THREADED BOLT 8MM X 70MM ALL BOLTS TIG WELDED TO LOCKING PLATES. STAINLESS STEEL PACKER PLATES 10MM THICK WITH HOLES AS STATED.

SECURITY HASP AND STAPLES ARE HANDED LEFT/RIGHT FOR SPECIFIC DOOR SETS.

ALSO AVAILABLE ARE DRILLED–ONLY RECEIVER PLATES FOR SINGLE DOORS.

NOT TO SCALE

electricity north west

FREDERICK ROAD, SALFORD
M6 6QH
TEL 0161 6041370

CIVIL DISTRIBUTION SUBSTATION

HASP & STAPLE LOCKING ARRANGEMENT

DRAWN	JEWB	SCALE	NTS	SITE NAME	–		
APPROVED		DATE	JULY 16	P.F.R. NO.	–	DWG STATUS	APPROVAL
OLD DWG NO	–	SHEET SIZE	A2	DWG NO	900350–020	REV	0