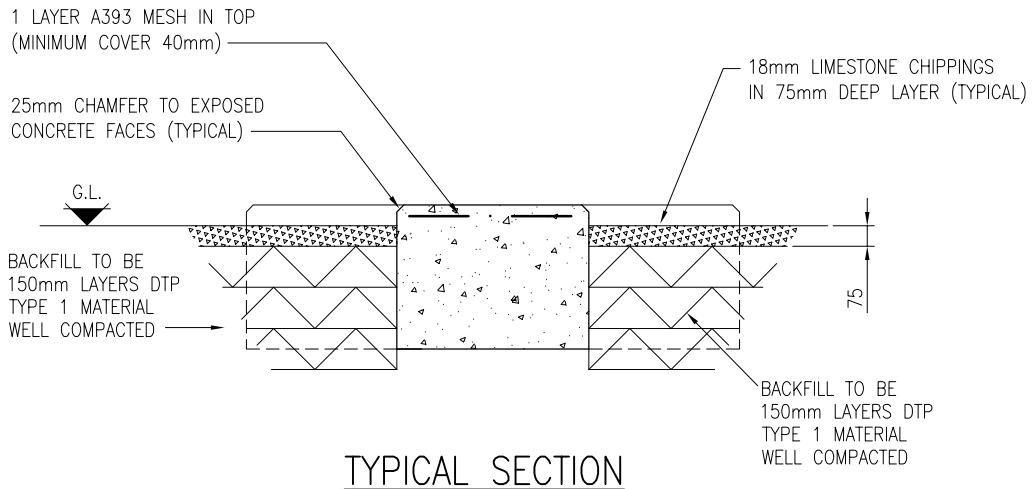


TYPICAL SECTION

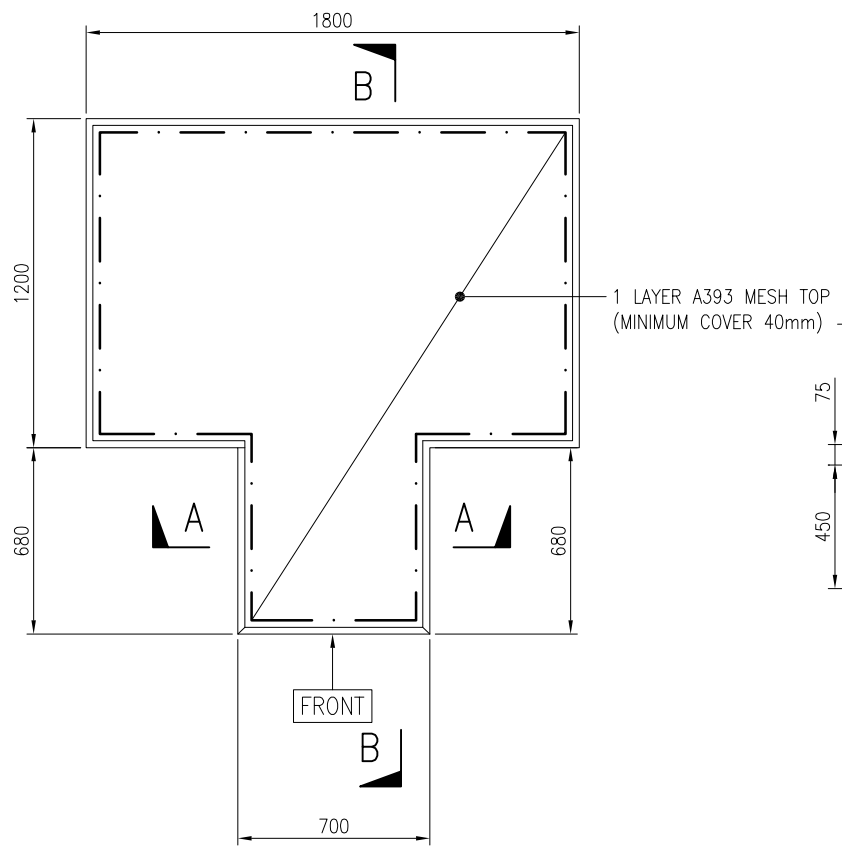


PLAN

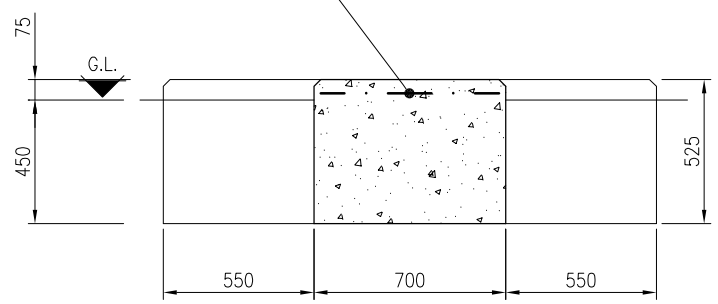


SECTION A–A

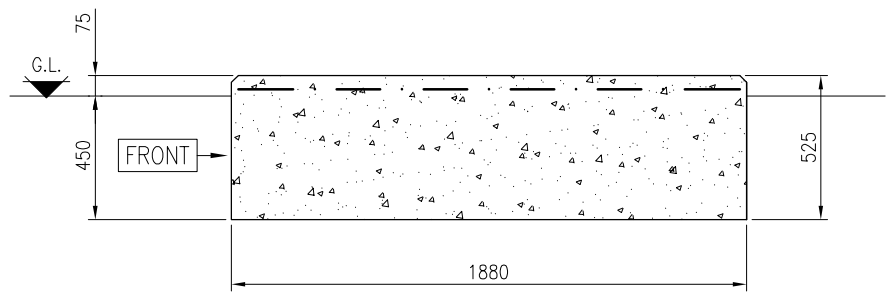


SECTION B–B

## SITE NOTES

1. CONTRACTOR TO OBTAIN UNDERGROUND CABLE & SERVICE RECORDS PRIOR TO COMMENCEMENT OF ANY WORKS.
2. THE CONTRACTOR MUST ASSUME THAT ANY EXISTING CABLES LOCATED WITHIN THE WORKS ARE LIVE AND LIAISE WITH THE ELECTRICITY NORTHWEST ENGINEER FOR ADVICE.
3. SITE SPECIFIC RISK ASSESSMENT TO BE UNDERTAKEN PRIOR TO COMMENCEMENT OF ANY WORKS.
4. FOUNDATION DESIGN HAS BEEN BASED ON A SUITABLE BEARING PRESSURE FOR MOST GROUND CONDITIONS INCLUDING CLAYS. FORMATION LEVEL FOR FOUNDATIONS TO BE TAKEN DOWN TO GROUND THAT IS SUFFICIENTLY FIRM TO PROVIDE PHYSICAL SUPPORT TO THE STRUCTURE.
5. FOUNDATION FORMATION LEVELS TO BE INSPECTED AND APPROVED PRIOR TO FOUNDATION CONSTRUCTION.

## GENERAL NOTES

1. DO NOT SCALE.
2. ALL DIMENSIONS ARE IN MILLIMETRES UNLESS NOTED OTHERWISE.
3. THIS DRAWING IS TO BE READ IN CONJUNCTION WITH ELECTRICITY NORTHWEST CODE OF PRACTICE ES352
4. ALL WORK TO BE CARRIED OUT IN ACCORDANCE WITH CURRENT BUILDING REGULATIONS AND RELEVANT BRITISH STANDARDS AND CODES OF PRACTICE.
5. CONCRETE TO BE STRENGTH CLASS C32/40 TO BS8500

electricity northwest

FREDERICK ROAD, SALFORD
M6 6QH
TEL 0161 6041370

CIVIL DISTRIBUTION SUBSTATION

PLINTH FOR FRMU Mk2
WITH MOUNTED TRANSFORMER

| | | | | | | | |
|---|---|---|---|---|---|---|---|
| DRAWN | TR | SCALE | 1:20 AT A2 | SITE NAME | – | | |
| APPROVED | WD | DATE | MAY 2016 | P.F.R. NO. | – | DWG STATUS | APPROVAL |
| OLD DWG NO | – | SHEET SIZE | A2 | DWG NO | 900350–018 | REV | 1 |