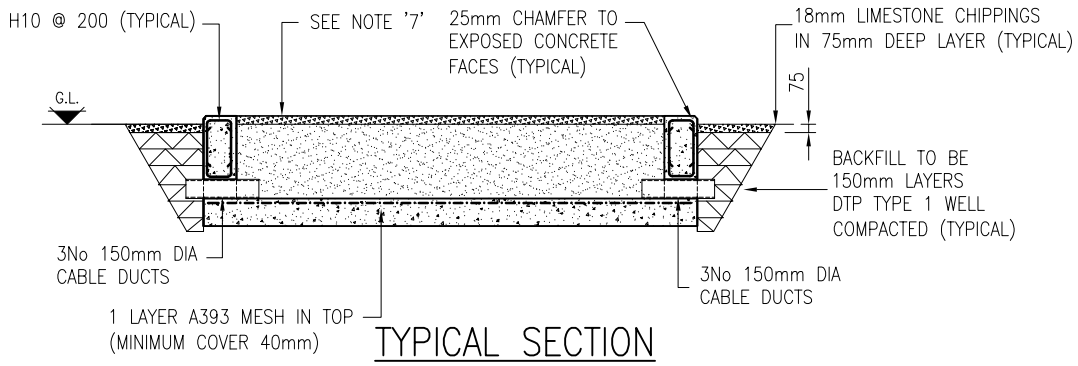


TYPICAL SECTION

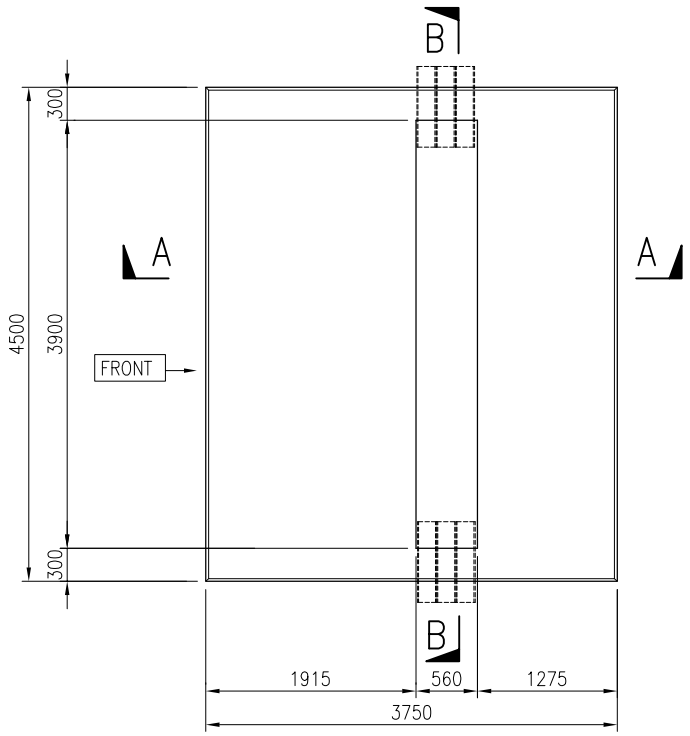


FOUNDATION PLAN

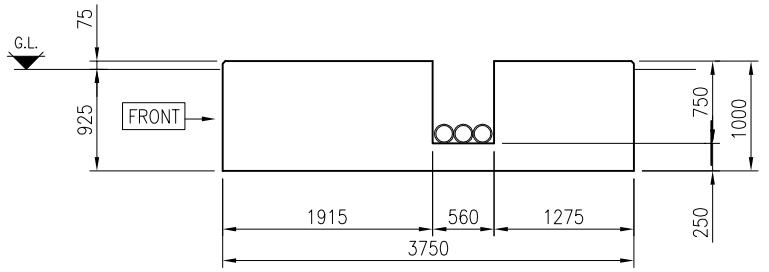


SECTION A–A

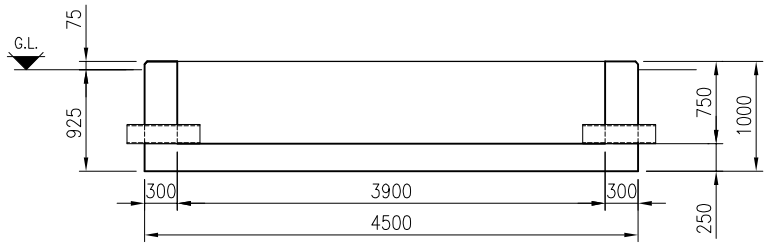


SECTION B–B

CONCRETE GENERAL ARRANGEMENT

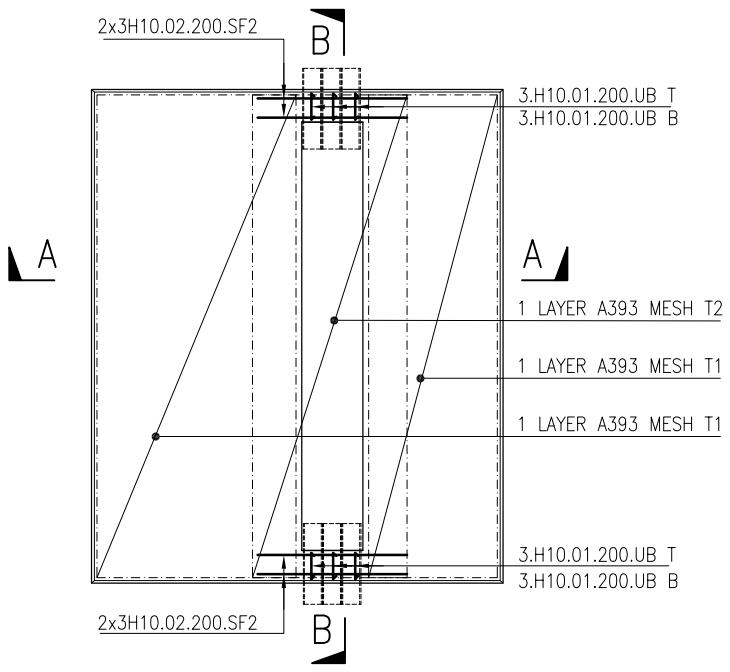


FOUNDATION PLAN
(SCALE 1:50)

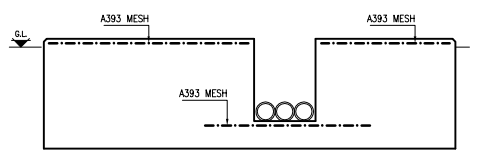


SECTION A–A
(SCALE 1:25)

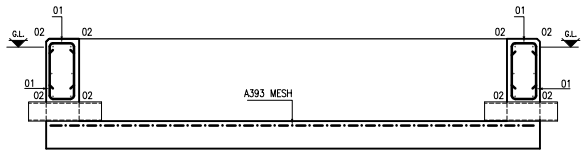


SECTION B–B
(SCALE 1:25)

REINFORCEMENT DETAILS

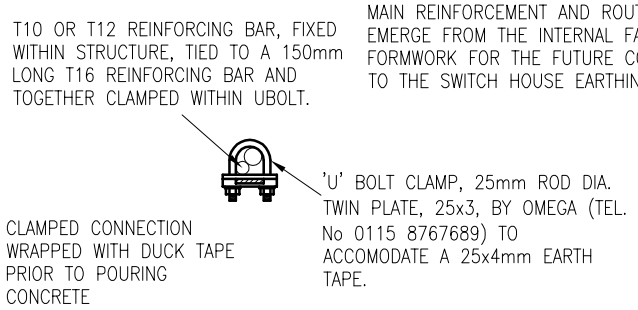


DETAIL OF REINFORCEMENT/EARTHING CLAMP
(SCALE 1:5)

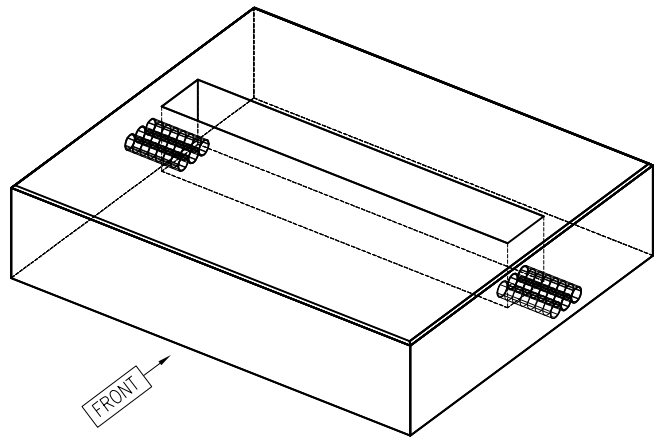


ISOMETRIC VIEW

| BENDING SCHEDULE TO BS 8666:2005 | | | | | | | | | |
|---|---|---|---|---|---|---|---|---|---|
| Bar mark | Type & size | No. of mbrs | No. of bars in each | Total no. | Length of each bar † mm | Shape code | A * mm | B * mm | C * mm |
| 01 | H10 | 1 | 12 | 12 | 1075 | 21 | 450 | 215 | 450 |
| 02 | H10 | 1 | 12 | 12 | 1350 | 00 | 1350 | | |
| A393 MESH FABRIC = 18m2 | | | | | | | | | |

† Specified in multiples Of 25mm  * Specified in multiples Of 5mm

## SITE NOTES

1. CONTRACTOR TO OBTAIN UNDERGROUND CABLE & SERVICE RECORDS PRIOR TO COMMENCEMENT OF ANY WORKS.
2. THE CONTRACTOR MUST ASSUME THAT ANY EXISTING CABLES LOCATED WITHIN THE WORKS ARE LIVE AND LIAISE WITH THE ELECTRICITY NORTH WEST ENGINEER FOR ADVICE.
3. SITE SPECIFIC RISK ASSESSMENT TO BE UNDERTAKEN PRIOR TO COMMENCEMENT OF ANY WORKS.
4. FOUNDATION DESIGN HAS BEEN BASED ON A SUITABLE BEARING PRESSURE FOR MOST GROUND CONDITIONS INCLUDING CLAYS. FORMATION LEVEL FOR FOUNDATIONS TO BE TAKEN DOWN TO GROUND THAT IS SUFFICIENTLY FIRM TO PROVIDE PHYSICAL SUPPORT TO THE STRUCTURE.
5. FOUNDATION FORMATION LEVELS TO BE INSPECTED AND APPROVED PRIOR TO FOUNDATION CONSTRUCTION.

## CABLE TRENCH

7. CABLE AREA TO BE BACKFILLED WITH WELL CONSOLIDATED SAND. WITH 75mm LAYER OF SINGLE SIZE 14–20mm. LIMESTONE CHIPPINGS. ALL TO BE COMPLETED BY ELECTRICITY NORTH WEST AFTER INSTALLATION OF ALL CABLES.

## CABLE DUCTS

8. CABLE DUCTS TO BE SET WITH MASS CONCRETE AT BOTH ENDS AND SEALED BY ENW AFTER INSTALLATION OF CABLES.

## GENERAL NOTES

1. DO NOT SCALE.
2. ALL DIMENSIONS ARE IN MILLIMETRES UNLESS NOTED OTHERWISE.
3. THIS DRAWING IS TO BE READ IN CONJUNCTION WITH ELECTRICITY NORTH WEST CODE OF PRACTICE ES352
4. ALL WORK TO CARRIED OUT IN ACCORDANCE WITH CURRENT BUILDING REGULATIONS AND RELEVANT BRITISH STANDARDS AND CODES OF PRACTICE.

## REINFORCEMENT NOTES

1. Concrete to be strength class C32/40 to BS 8500.
2. Loose bar reinforcement to have the following minimum laps UNO: – H10 = 350mm
3. Standard A393 fabric mesh to have a minimum lap of 270mm.
4. 40mm cover to all reinforcement UNO.
5. Bar references shall be interpreted thus: –

85 H12 – 27 – 125 T1

- 85 – Location
- H12 – Spacing
- 27 – Bar Mark
- 125 – Bar Diameter
- T1 – Type of Steel
- H – Number of Bars

6. Locations: –
   - – T1 Denotes Top face, top layer
   - – T2 Denotes Top face, second layer
   - – SF2 Denotes Side face, second layer
7. "H" Denotes deformed Type 2 high yield steel bars to BS 4449:2005 – characteristic yield strength 500MPa.

electricity north west

FREDERICK ROAD, SALFORD
M6 6QH
TEL 0161 6041370

CIVIL DISTRIBUTION SUBSTATION

PLINTH FOR SCHNEIDER EXTENSIBLE SWITCHGEAR IN GRP HOUSING (CABLE TRENCH CENTRAL)

| | | | | | | | |
|---|---|---|---|---|---|---|---|
| DRAWN | GK | SCALE | 1:50 | SITE NAME | – | | |
| APPROVED | WD | DATE | NOV 2013 | P.F.R. NO. | – | DWG STATUS | APPROVAL |
| OLD DWG NO | – | SHEET SIZE | A3 | DWG NO | 900350–014 | REV | 1 |