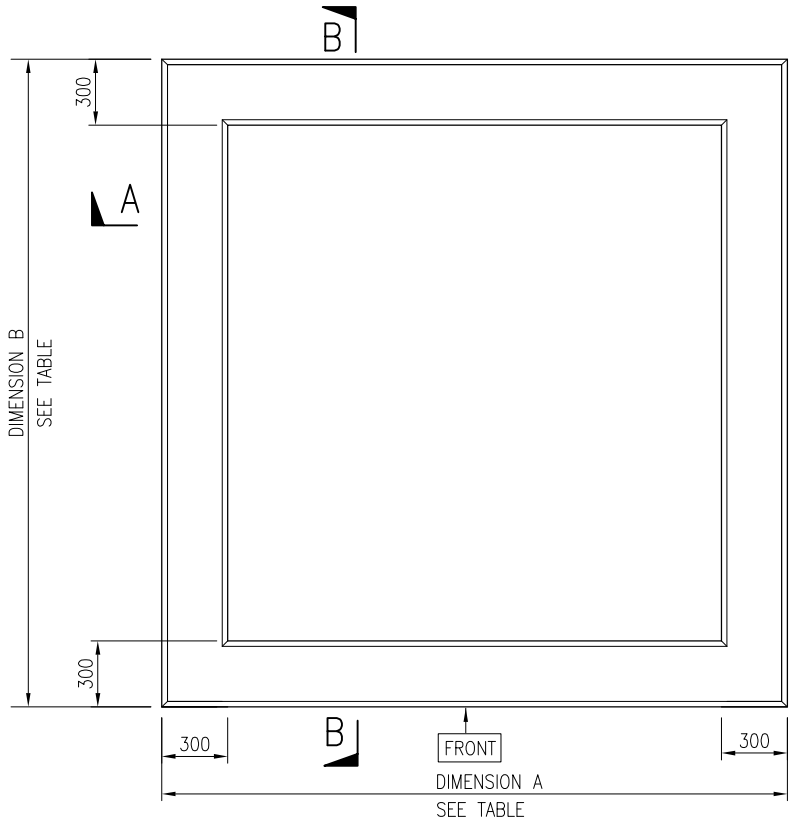

PLAN ON RING BEAM

(SCALE 1:25)

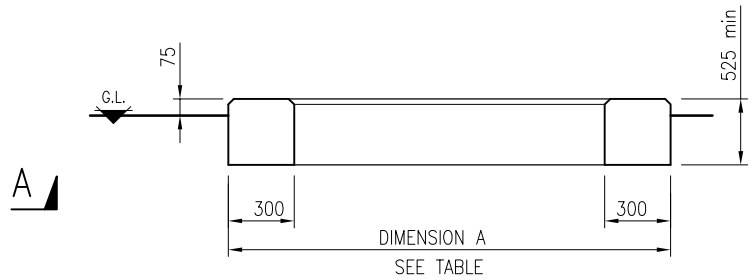

SECTION A–A

(SCALE 1:25)

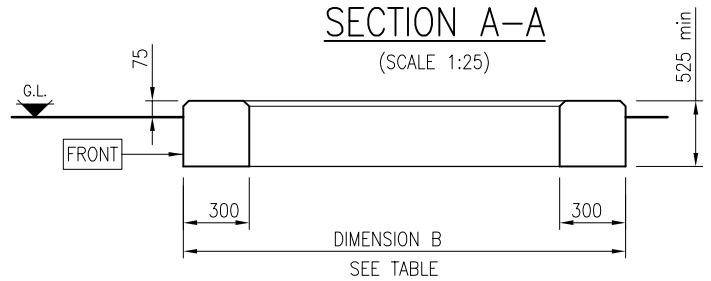

SECTION B–B

(SCALE 1:25)

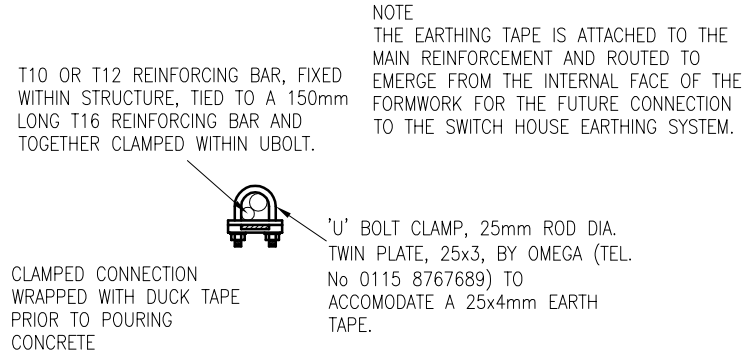

NOTE
THE EARTHING TAPE IS ATTACHED TO THE MAIN REINFORCEMENT AND ROUTED TO EMERGE FROM THE INTERNAL FACE OF THE FORMWORK FOR THE FUTURE CONNECTION TO THE SWITCH HOUSE EARTHING SYSTEM.

DETAIL OF REINFORCEMENT/EARTHING CLAMP

(SCALE 1:5)

SITE NOTES

1. CONTRACTOR TO OBTAIN UNDERGROUND CABLE & SERVICE RECORDS PRIOR TO COMMENCEMENT OF ANY WORKS.
2. THE CONTRACTOR MUST ASSUME THAT ANY EXISTING CABLES LOCATED WITHIN THE WORKS ARE LIVE AND LIAISE WITH THE ELECTRICITY NORTH WEST ENGINEER FOR ADVICE.
3. SITE SPECIFIC RISK ASSESSMENT TO BE UNDERTAKEN PRIOR TO COMMENCEMENT OF ANY WORKS.
4. FOUNDATION DESIGN HAS BEEN BASED ON A SUITABLE BEARING PRESSURE FOR MOST GROUND CONDITIONS INCLUDING CLAYS. FORMATION LEVEL FOR FOUNDATIONS TO BE TAKEN DOWN TO GROUND THAT IS SUFFICIENTLY FIRM TO PROVIDE PHYSICAL SUPPORT TO THE STRUCTURE.
5. FOUNDATION FORMATION LEVELS TO BE INSPECTED AND APPROVED PRIOR TO FOUNDATION CONSTRUCTION.
6. B.S. PIN KERB 250mm x 50mm WITH CONCRETE SURROUND TO BE PLACED AT FRONT EDGE OF THE CABINET.

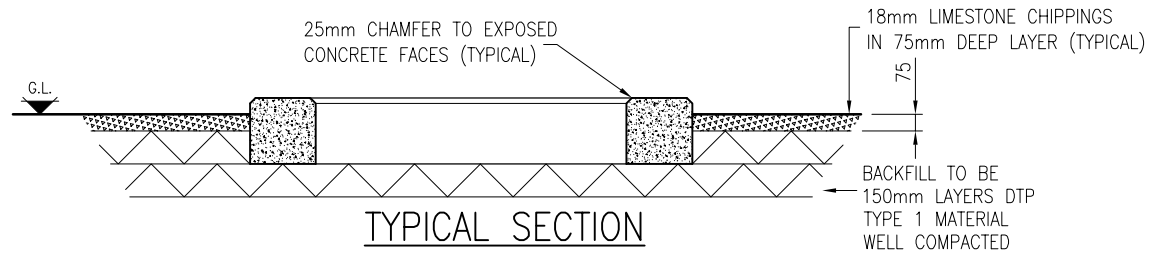

TYPICAL SECTION

(SCALE 1:25)

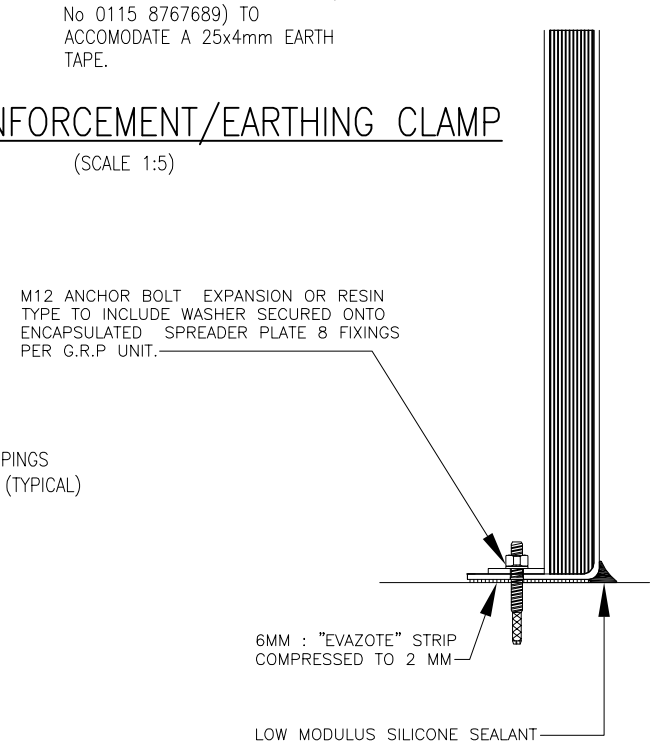

G.R.P FIXING DETAIL

SCALE 1:10

GENERAL NOTES

1. DO NOT SCALE.
2. ALL DIMENSIONS ARE IN MILLIMETRES UNLESS NOTED OTHERWISE.
3. THIS DRAWING IS TO BE READ IN CONJUNCTION WITH ELECTRICITY NORTH WEST CODE OF PRACTICE ES352
4. ALL WORK TO CARRIED OUT IN ACCORDANCE WITH CURRENT BUILDING REGULATIONS AND RELEVANT BRITISH STANDARDS AND CODES OF PRACTICE.

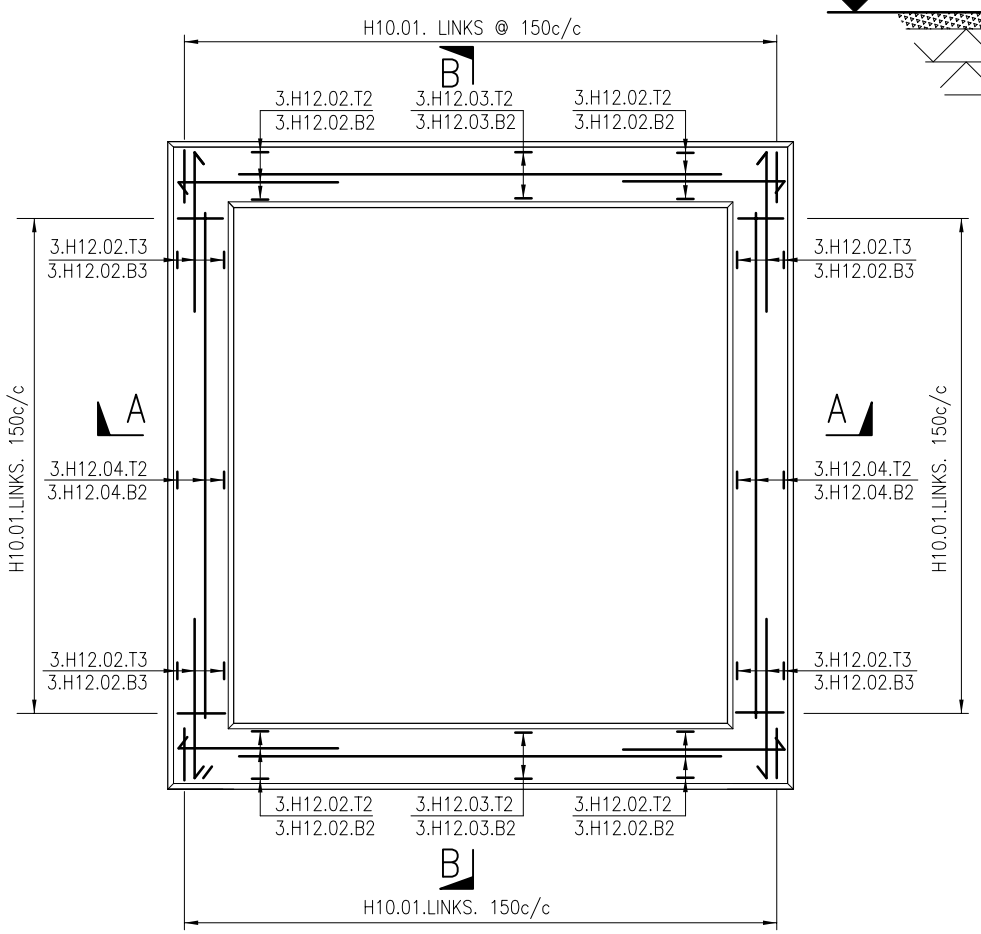

PLAN ON RING BEAM

(SCALE 1:25)

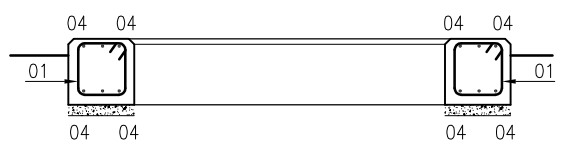

SECTION A–A

(SCALE 1:25)

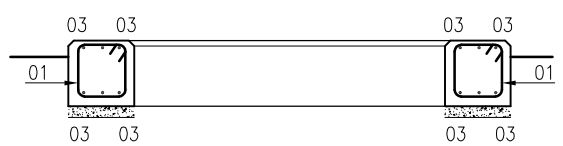

SECTION B–B

(SCALE 1:25)

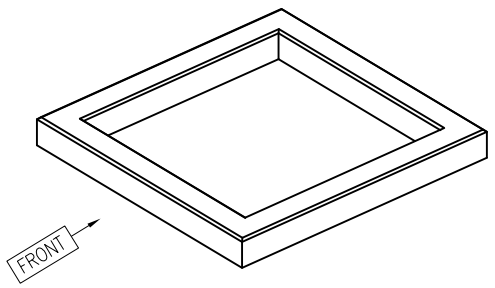

ISOMETRIC VIEW

(SCALE 1:50)

REINFORCEMENT NOTES

1. Concrete to be strength class C32/40 to BS 8500.
2. Loose bar reinforcement to have the following minimum laps UNO: –
   - H10 = 350mm
   - H12 = 420mm
3. Standard A393 fabric mesh to have a minimum lap of 270mm.
4. 40mm cover to all reinforcement UNO.
5. Bar references shall be interpreted thus: –

85 H12 – 27 – 125 T1

- Location
- Spacing
- Bar Mark
- Bar Diameter
- Type of Steel
- Number of Bars

6. Locations: –
   - T1 Denotes Top face, top layer
   - T2 Denotes Top face, second layer
   - B2 Denotes Bottom face, second layer
   - B1 Denotes Bottom face, bottom layer
7. "H" Denotes deformed Type 2 high yield steel bars to BS 4449:2005 – characteristic yield strength 500MPa.

BENDING SCHEDULE TO BS 8666:2005

Bar mark	Type & size	No. of mbrs	No. of bars in each	Total no.	Length of each bar † mm	Shape code	A * mm	B * mm	C * mm
BS No. 001									
01	H10	1	70	70	1450	51	215	440	
02	H12	1	48	48	1075	11	720	375	
03	H12	1	12	12	2300	00	2300		
04	H12	1	12	12	2200	00	2200		
BS No. 002									
01	H10	1	102	102	1450	51	215	440	
02	H12	1	48	48	1075	11	720	375	
03	H12	1	12	12	3850	00	3850		
04	H12	1	12	12	3100	00	3100		
BS No. 004									
01	H10	1	80	80	1450	51	215	440	
02	H12	1	48	48	1075	11	720	375	
03	H12	1	12	12	2600	00	2600		
04	H12	1	12	12	2700	00	2700		

† Specified in multiples Of 25mm * Specified in multiples Of 5mm

GRP UNIT DIMENSION VARIATION TABLE

PLANT TYPE	DIMENSION A	DIMENSION B	BENDING SCHEDULE No
GRP FOR T4GF3 AND T4GF3RMU	2950mm	2850mm	001
GRP FOR SCHNEIDER EXTENSIBLE SWITCHGEAR	4500mm	3750mm	002
GRP FOR LUCY SABRE SWITCHGEAR	3250mm	3350mm	004

electricity north west

FREDERICK ROAD, SALFORD
M6 6QH
TEL 0161 6041370

CIVIL DISTRIBUTION SUBSTATION

TYPICAL RING BEAM FOUNDATION FOR GRP HOUSINGS

DRAWN	GK	SCALE	AS SHOWN	SITE NAME	–		
APPROVED	WD	DATE	SEPT 2013	P.F.R. NO.	–	DWG STATUS	APPROVAL
OLD DWG NO	–	SHEET SIZE	A3	DWG NO	900350–013	REV	1