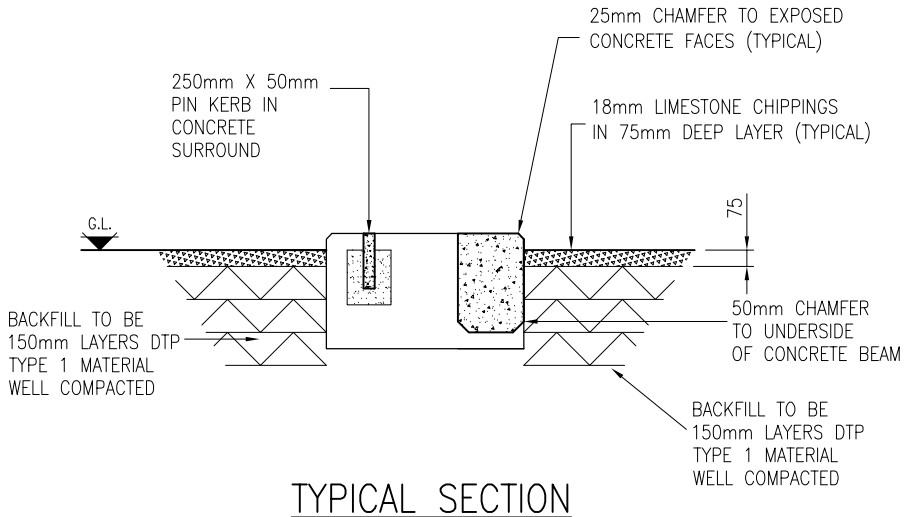

TYPICAL SECTION

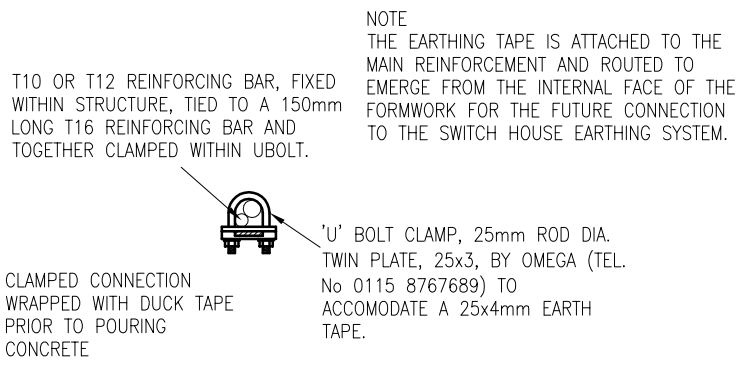

DETAIL OF REINFORCEMENT/EARTHING CLAMP

(SCALE 1:5)

SITE NOTES

1. CONTRACTOR TO OBTAIN UNDERGROUND CABLE & SERVICE RECORDS PRIOR TO COMMENCEMENT OF ANY WORKS.
2. THE CONTRACTOR MUST ASSUME THAT ANY EXISTING CABLES LOCATED WITHIN THE WORKS ARE LIVE AND LIAISE WITH THE ELECTRICITY NORTH WEST ENGINEER FOR ADVICE.
3. SITE SPECIFIC RISK ASSESSMENT TO BE UNDERTAKEN PRIOR TO COMMENCEMENT OF ANY WORKS.
4. FOUNDATION DESIGN HAS BEEN BASED ON A SUITABLE BEARING PRESSURE FOR MOST GROUND CONDITIONS INCLUDING CLAYS. FORMATION LEVEL FOR FOUNDATIONS TO BE TAKEN DOWN TO GROUND THAT IS SUFFICIENTLY FIRM TO PROVIDE PHYSICAL SUPPORT TO THE STRUCTURE.
5. FOUNDATION FORMATION LEVELS TO BE INSPECTED AND APPROVED PRIOR TO FOUNDATION CONSTRUCTION.
6. B.S. PIN KERB 250mm x 50mm WITH CONCRETE SURROUND TO BE PLACED AT FRONT EDGE OF THE CABINET.

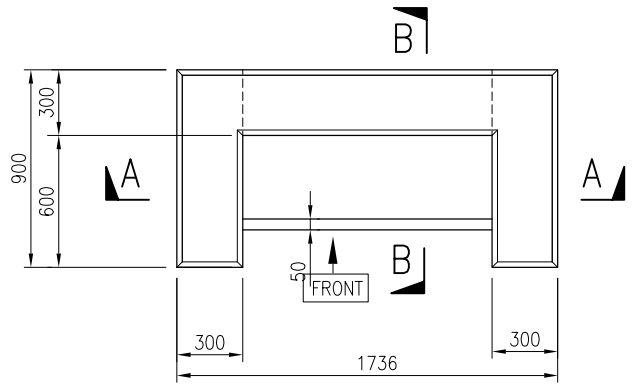

PLAN

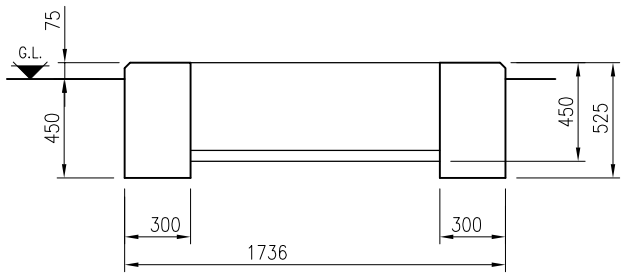

SECTION A–A

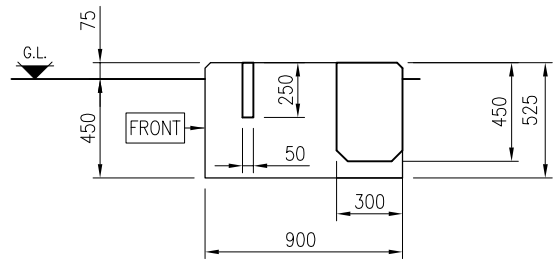

SECTION B–B

CONCRETE GENERAL ARRANGEMENT

GENERAL NOTES

1. DO NOT SCALE.
2. ALL DIMENSIONS ARE IN MILLIMETRES UNLESS NOTED OTHERWISE.
3. THIS DRAWING IS TO BE READ IN CONJUNCTION WITH ELECTRICITY NORTH WEST CODE OF PRACTICE ES352
4. ALL WORK TO CARRIED OUT IN ACCORDANCE WITH CURRENT BUILDING REGULATIONS AND RELEVANT BRITISH STANDARDS AND CODES OF PRACTICE.

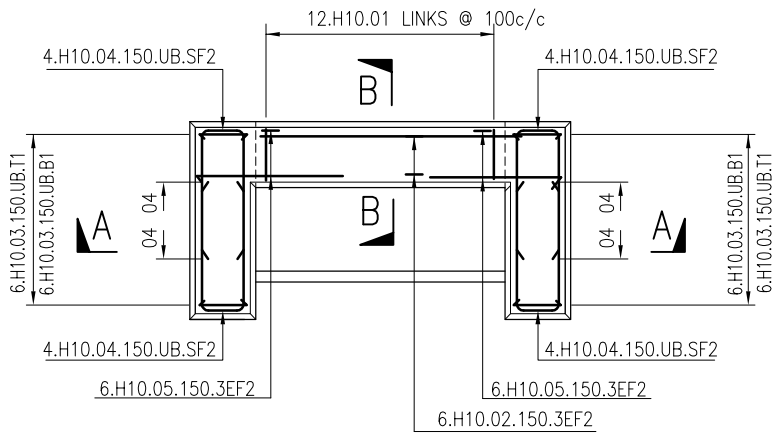

PLAN

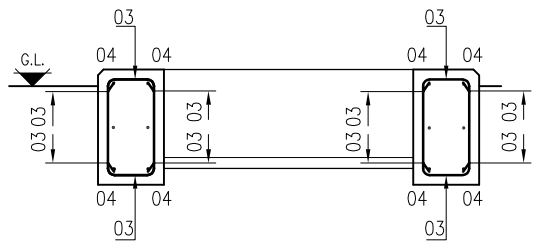

SECTION A–A

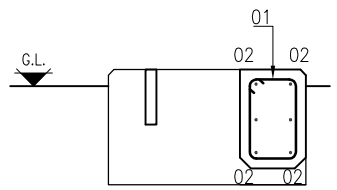

SECTION B–B

REINFORCEMENT NOTES

1. Concrete to be strength class C32/40 to BS 8500.
2. Loose bar reinforcement to have the following minimum laps UNO: –
   - H10 = 350mm
   - H12 = 420mm
3. Standard A393 fabric mesh to have a minimum lap of 270mm.
4. 40mm cover to all reinforcement UNO.
5. Bar references shall be interpreted thus: –

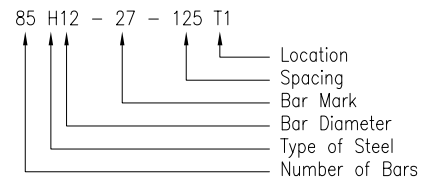

6. Locations: –
   - T1 Denotes Top face, top layer
   - T2 Denotes Top face, second layer
   - B2 Denotes Bottom face, second layer
   - B1 Denotes Bottom face, bottom layer
7. "H" Denotes deformed Type 2 high yield steel bars to BS 4449:2005 – characteristic yield strength 500MPa.

REINFORCEMENT DETAILS

BENDING SCHEDULE TO BS 8666:2005

Bar mark	Type & size	No. of mbrs	No. of bars in each	Total no.	Length of each bar † mm	Shape code	A * mm	B * mm	C * mm
01	H10	1	12	12	1325	51	215	365	
02	H10	1	6	6	1100	00	1100		
03	H10	1	24	24	975	21	395	215	395
04	H10	1	16	16	1325	21	580	190	580
05	H10	1	12	12	800	11	170	650	

† Specified in multiples Of 25mm * Specified in multiples Of 5mm

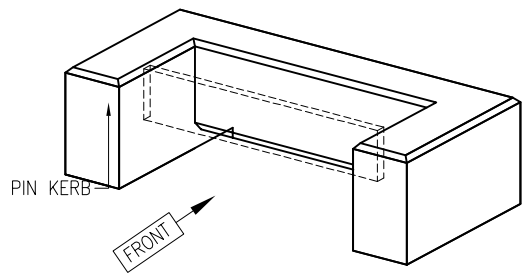

ISOMETRIC VIEW

electricity north west	FREDERICK ROAD, SALFORD M6 6QH TEL 0161 6041370			CIVIL DISTRIBUTION SUBSTATION FOUNDATION FOR SCHNEIDER SHIELDED FEEDER PILLAR 5 WAY 1600A			
DRAWN	GK	SCALE	1:25	SITE NAME	–		
APPROVED	WD	DATE	SEPT 2013	P.F.R. NO.	–	DWG STATUS	APPROVAL
OLD DWG NO	–	SHEET SIZE	A2	DWG NO	900350–011	REV	1