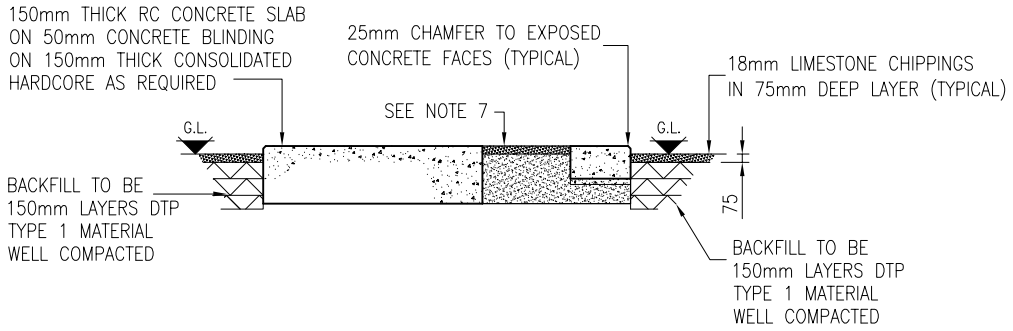

TYPICAL SECTION

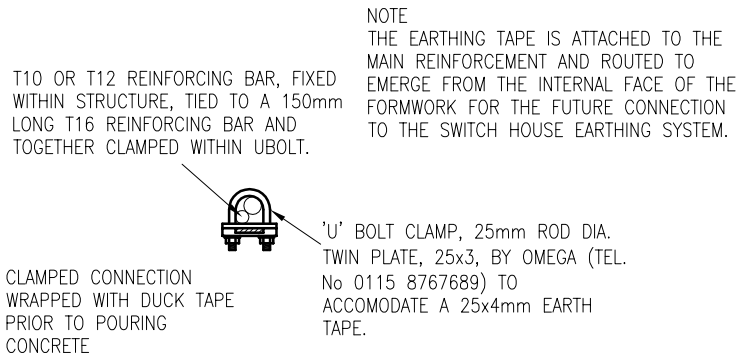

DETAIL OF REINFORCEMENT/EARTHING CLAMP

(SCALE 1:5)

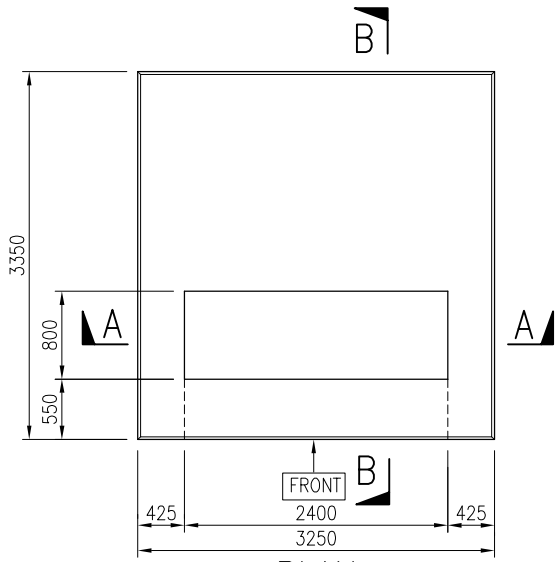

PLAN

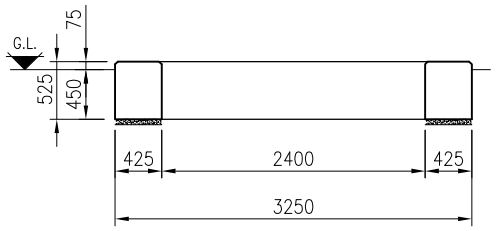

SECTION A–A

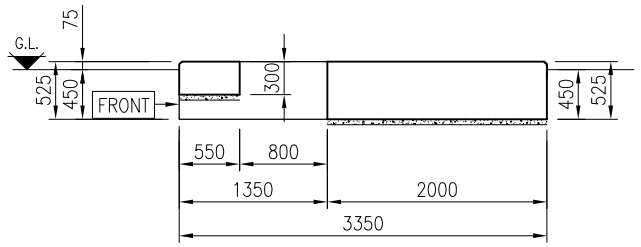

SECTION B–B

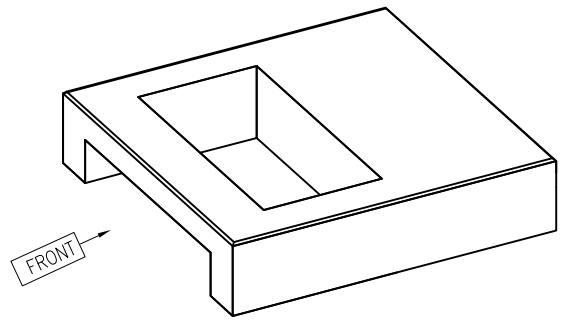

ISOMETRIC VIEW

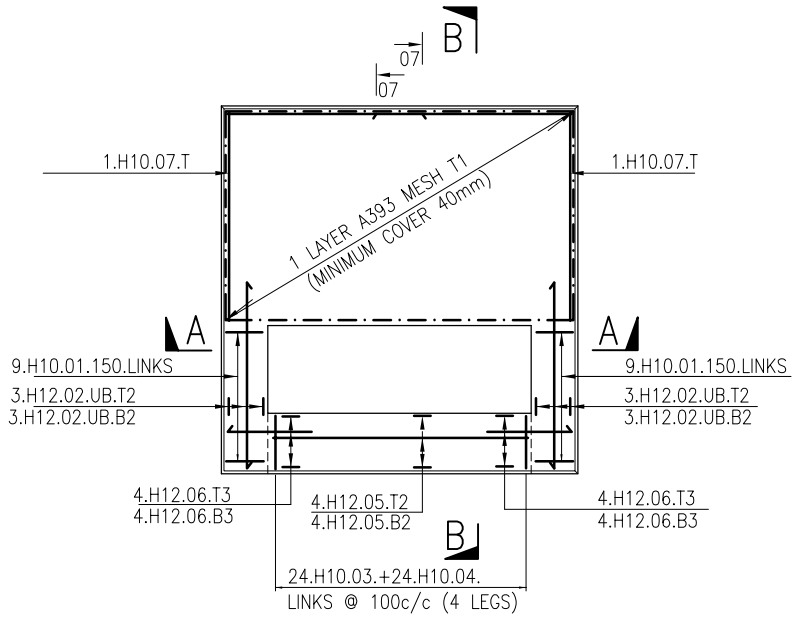

PLAN

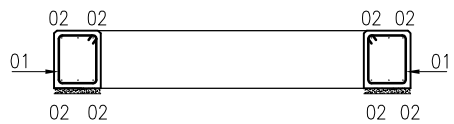

SECTION A–A

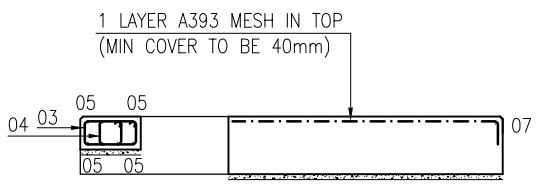

SECTION B–B

REINFORCEMENT DETAILS

BENDING SCHEDULE TO BS 8666:2005									
Bar mark	Type & size	No. of mbrs	No. of bars in each	Total no.	Length of each bar † mm	Shape code	A * mm	B * mm	C * mm
1	H10	1	18	18	1725	51	340	440	
2	H12	1	12	12	2500	21	430	1685	430
3	H10	1	24	24	1525	51	465	215	
4	H10	1	24	24	900	51	155	215	
5	H12	1	8	8	2350	00	2350		
6	H12	1	16	16	1275	11	850	430	
7	H10	1	2	2	3150	11	1760	1900	
A393 MESH FABRIC = 6.1m2									

† Specified in multiples Of 25mm * Specified in multiples Of 5mm

SITE NOTES

1. CONTRACTOR TO OBTAIN UNDERGROUND CABLE & SERVICE RECORDS PRIOR TO COMMENCEMENT OF ANY WORKS.
2. THE CONTRACTOR MUST ASSUME THAT ANY EXISTING CABLES LOCATED WITHIN THE WORKS ARE LIVE AND LIAISE WITH THE ELECTRICITY NORTH WEST ENGINEER FOR ADVICE.
3. SITE SPECIFIC RISK ASSESSMENT TO BE UNDERTAKEN PRIOR TO COMMENCEMENT OF ANY WORKS.
4. FOUNDATION DESIGN HAS BEEN BASED ON A SUITABLE BEARING PRESSURE FOR MOST GROUND CONDITIONS INCLUDING CLAYS. FORMATION LEVEL FOR FOUNDATIONS TO BE TAKEN DOWN TO GROUND THAT IS SUFFICIENTLY FIRM TO PROVIDE PHYSICAL SUPPORT TO THE STRUCTURE.
5. FOUNDATION FORMATION LEVELS TO BE INSPECTED AND APPROVED PRIOR TO FOUNDATION CONSTRUCTION.

CABLE TRENCH

7. CABLE AREA TO BE BACK–FILLED AFTER INSTALLATION OF ALL CABLES, WITH WELL CONSOLIDATED SAND, WITH A 75mm TOP LAYER OF SINGLE SIZE 14–20mm LIMESTONE CHIPPINGS.

GENERAL NOTES

1. DO NOT SCALE.
2. ALL DIMENSIONS ARE IN MILLIMETRES UNLESS NOTED OTHERWISE.
3. THIS DRAWING IS TO BE READ IN CONJUNCTION WITH ELECTRICITY NORTH WEST CODE OF PRACTICE ES352
4. ALL WORK TO CARRIED OUT IN ACCORDANCE WITH CURRENT BUILDING REGULATIONS AND RELEVANT BRITISH STANDARDS AND CODES OF PRACTICE.

REINFORCEMENT NOTES

1. Concrete to be strength class C32/40 to BS 8500.
2. Loose bar reinforcement to have the following minimum laps UNO: –
   - H10 = 350mm
   - H12 = 420mm
3. Standard A393 fabric mesh to have a minimum lap of 270mm.
4. 40mm cover to all reinforcement UNO.
5. Bar references shall be interpreted thus: –

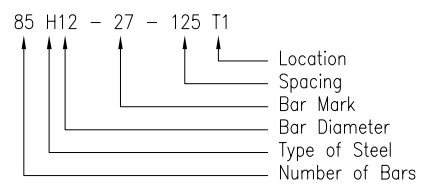

6. Locations: –
   - T1 Denotes Top face, top layer
   - T2 Denotes Top face, second layer
   - B2 Denotes Bottom face, second layer
   - B1 Denotes Bottom face, bottom layer
7. "H" Denotes deformed Type 2 high yield steel bars to BS 4449:2005 – characteristic yield strength 500MPa.

electricity north west	FREDERICK ROAD, SALFORD M6 6QH TEL 0161 6041370			CIVIL DISTRIBUTION SUBSTATION FOUNDATION FOR LUCY SABRE VRN2A SWITCHGEAR IN GRP HOUSING			
DRAWN	GK	SCALE	1:50	SITE NAME	–		
APPROVED	WD	DATE	SEPT 2013	P.F.R. NO.	–	DWG STATUS	APPROVAL
OLD DWG NO	–	SHEET SIZE	A2	DWG NO	900350–003	REV	1