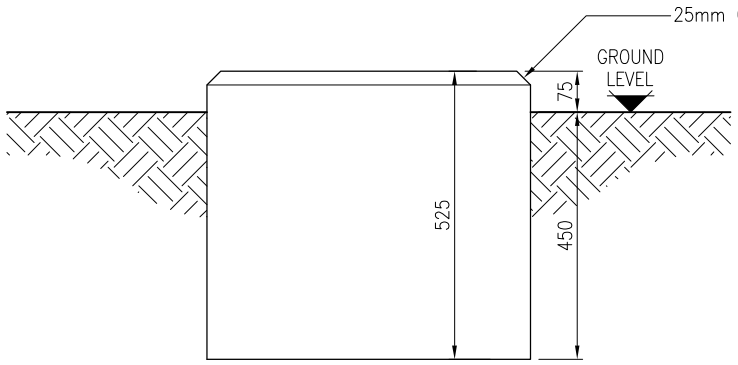

SECTION X–X

(SCALE 1:10)

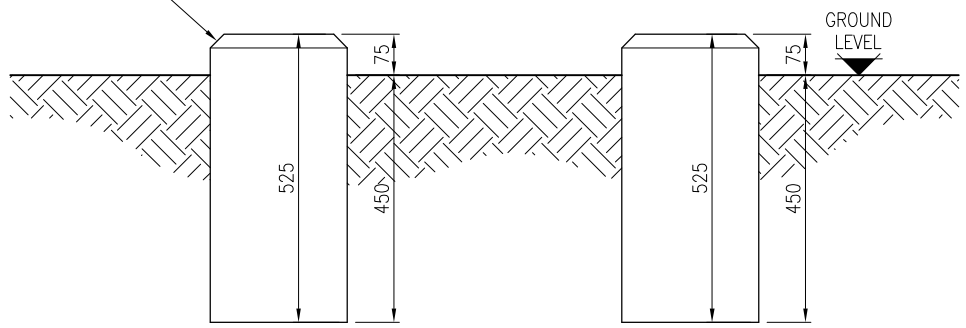

ELEVATION Y–Y

(SCALE 1:10)

CN2 RINGMASTER UNIT PLINTH DETAIL

SITE NOTES

1. CONTRACTOR TO OBTAIN UNDERGROUND CABLE & SERVICE RECORDS PRIOR TO COMMENCEMENT OF ANY WORKS.
2. THE CONTRACTOR MUST ASSUME THAT ANY EXISTING CABLES LOCATED WITHIN THE WORKS ARE LIVE AND LIAISE WITH THE ELECTRICITY NORTH WEST ENGINEER FOR ADVICE.
3. SITE SPECIFIC RISK ASSESSMENT TO BE UNDERTAKEN PRIOR TO COMMENCEMENT OF ANY WORKS.
4. FOUNDATION DESIGN HAS BEEN BASED ON A SUITABLE BEARING PRESSURE FOR MOST GROUND INCLUDING CLAYS. FORMATION LEVEL FOR FOUNDATIONS TO BE TAKEN DOWN TO GROUND THAT IS SUFFICIENTLY FIRM TO PROVIDE PHYSICAL SUPPORT TO THE STRUCTURE.
5. FOUNDATION FORMATION LEVELS TO BE INSPECTED AND APPROVED PRIOR TO FOUNDATION CONSTRUCTION.

GENERAL NOTES

1. DO NOT SCALE.
2. ALL DIMENSIONS ARE IN MILLIMETRES UNLESS NOTED OTHERWISE.
3. THIS DRAWING IS TO BE READ IN CONJUNCTION WITH ELECTRICITY NORTH WEST CODE OF PRACTICE ES352
4. ALL WORK TO CARRIED OUT IN ACCORDANCE WITH CURRENT BUILDING REGULATIONS AND RELEVANT BRITISH STANDARDS AND CODES OF PRACTICE.
5. CONCRETE TO BE STRENGTH CLASS C32/40 TO BS8500.

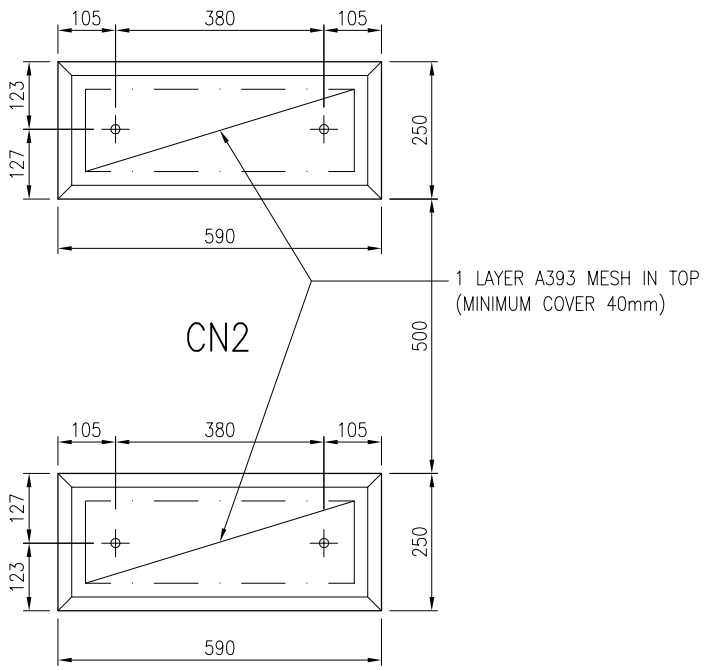

PLAN ON CN2 RINGMASTER UNIT PLINTH

(SCALE 1:10)

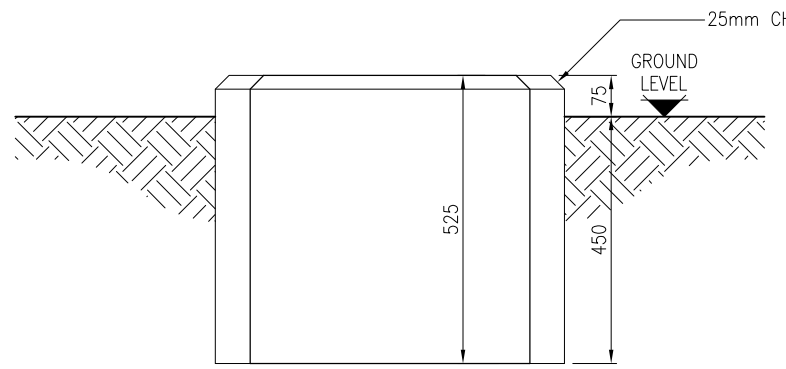

SECTION X–X

(SCALE 1:10)

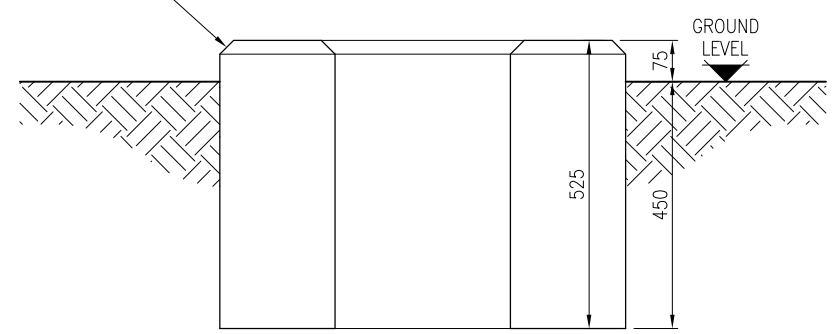

ELEVATION Y–Y

(SCALE 1:10)

RN2c & RN6c RINGMASTER UNIT PLINTH DETAIL

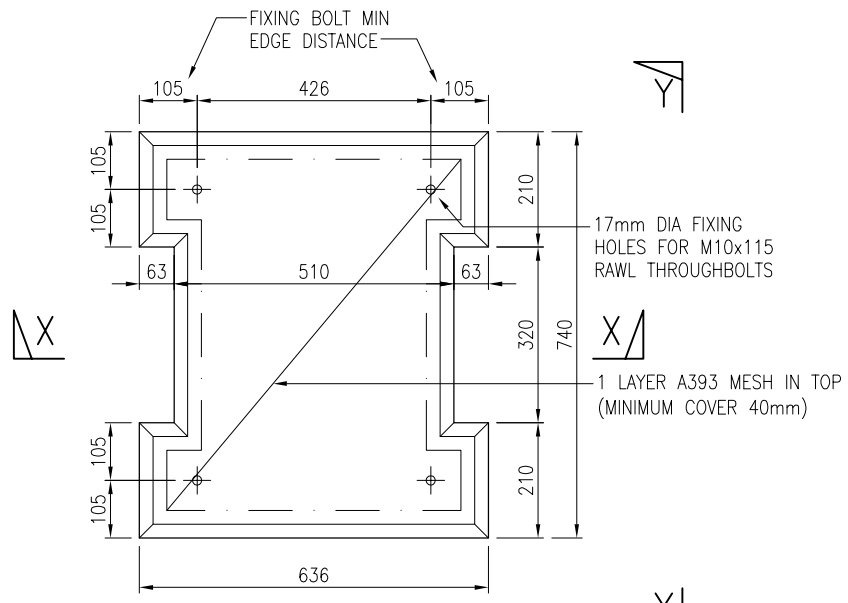

PLAN ON RN2c RINGMASTER UNIT PLINTH

(SCALE 1:10)

electricity north west	FREDERICK ROAD, SALFORD M6 6QH TEL 0161 6041370			CIVIL DISTRIBUTION SUBSTATION PLINTHS FOR SCHNEIDER CN2, RN2c & RN6c RINGMASTER UNITS			
DRAWN	GK	SCALE	1:25	SITE NAME	–		
APPROVED	WD	DATE	NOV 2013	P.F.R. NO.	–	DWG STATUS	APPROVAL
OLD DWG NO	–	SHEET SIZE	A2	DWG NO	900350–001	REV	1